Modular Cabinets • CD Storage Case • Photo Box • Router Bit Cabinet • Dovetail Key Joinery

Woodsmith®

Vol. 18 / No. 105

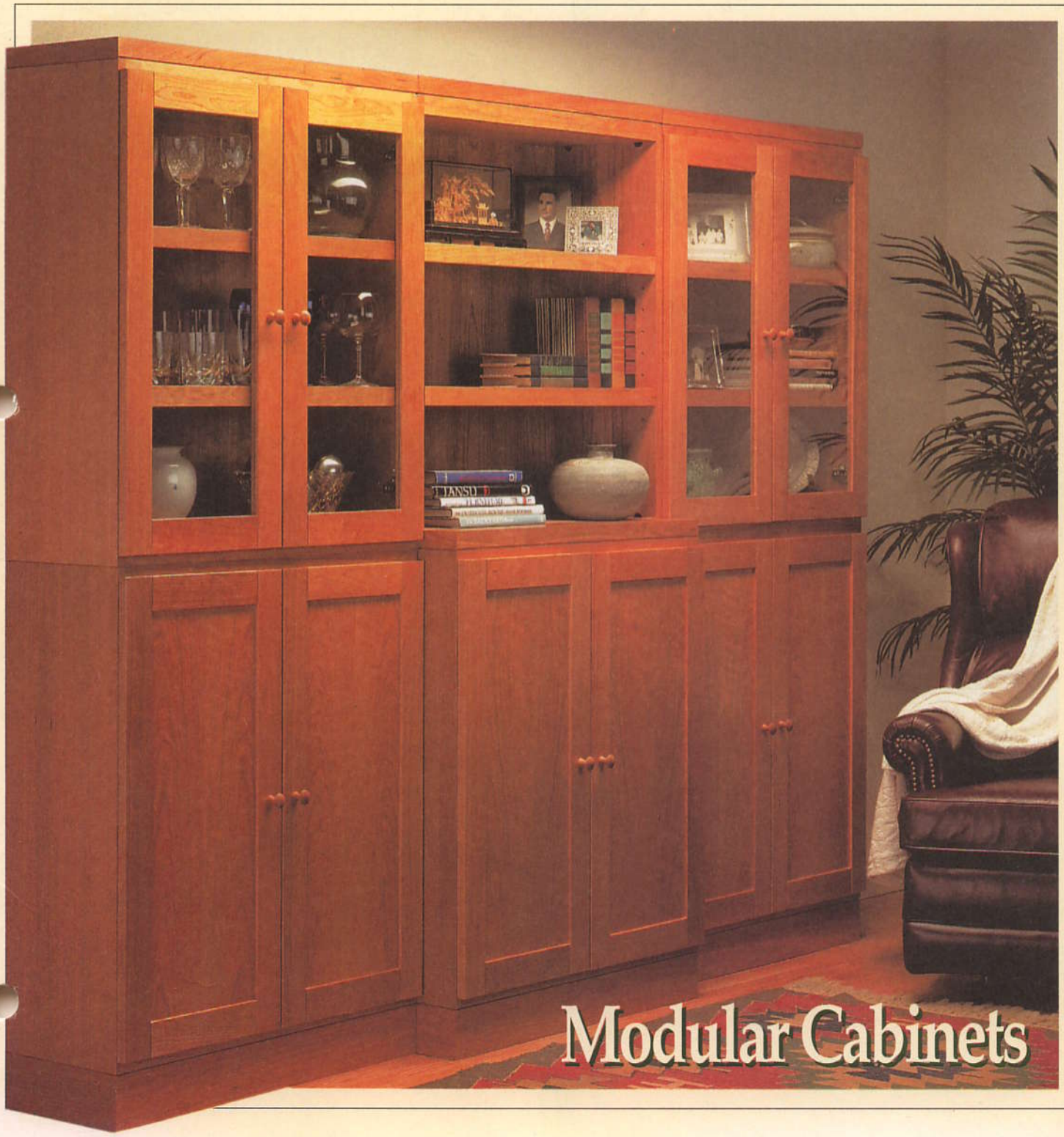

Woodsmith

No. 105 June, 1996

Publisher Donald B. Peschke
Editor Terry J. Strohman
Associate Editors Jon Garbison, Mark Williams
Art Director Todd Lambirth
Senior Illustrators David Kreyling, Dirk Ver Steeg
Graphic Designer Mike Mittermeier
Illustrator Erich Lage

CREATIVE RESOURCES

Creative Director: Ted Kralicek • *Project Design Dir.:* Ken Munkel • *Shop Manager:* Steve Curtis • *Shop Craftsman:* Steve Johnson • *Senior Photographer:* Crayola England

BOOKS

Executive Editor: Douglas L. Hicks • *Senior Graphic Designer:* Chris Glowacki

CIRCULATION

Circulation Director: Susan Du Bois • *Assistant Circulation Director:* Troy J. Dowell • *Subscription Manager:* Sandy Baum • *Renewal Manager:* Paige Rogers • *Assistant Direct Mail Mgr.:* Julie Greenlee • *Assistant Subscription Mgr.:* Joy Krause • *Associate Graphic Design Director:* Susie Rider • *Graphic Designer:* Cheryl L. Cynor

CORPORATE SERVICES

Vice President of Planning and Finance: Jon Macarthy • *Controller:* Robin Hutchinson • *Sr. Account.:* Laura Thomas • *Production Dir.:* George Chmielarz • *Electronic Publishing:* Douglas M. Lidster • *Production Artist:* Jon Snyder • *Production Manager:* Carol Quijano • *Electronic Comunications. Coord.:* Gordon C. Gaippe • *Network Administator:* Al Barnes • *Prof. Development Dir.:* Joyce Moore • *Admin. Assistants:* Cheryl A. Lee, Julia Fish • *Receptionist:* Jeanne Johnson • *Building Maint.:* Ken Griffith

WOODSMITH MAIL ORDER

Operations Director: Bob Baker • *Art Dir.:* Cindy Scarpino • *Materials Manager:* Mark Mattiussi • *Customer Service Mgr.:* Jennie Enos • *Nat. Sales Manager:* Kent A. Buckton • *Warehouse Supr.:* Nancy Johnson • *Buyer:* Linda Jones • *Systems Operator:* Tammy Aldini • *Team Leader:* Karla Eslinger • *Tech. Support:* Dave Stone • *Cust. Serv. Reps.:* Jennifer Murphy, Anna Cox, Kristi Andrews, Margo Petrus • *Warehouse:* Gloria Sheehan, Chuck Carlson, Sylvia Carey, Larry Prine, Scott Gilliam, Cathy Steiner

WOODSMITH STORE

Manager: Dave Larson • *Assistant Manager:* Paul Schneider • *Sales Staff:* Pat Lowry, Jerome Herr • *Office Manager:* Vicki Edwards

Woodsmith® (ISSN 0164-4114) is published bimonthly (Feb., Apr., June, Aug., Oct., Dec.) by August Home Publishing Company, 2200 Grand, Des Moines, IA 50312.

Woodsmith® is a registered trademark of August Home Publishing.
Copyright© 1996 August Home Publishing Company. All rights reserved.

Subscriptions: Single copy: $4.99. One year subscription (6 issues), $19.95. Two years (12 issues), $35.95. (Canada/Foreign add $5 per year, U.S. funds.)
Second Class Postage Paid at Des Moines, IA and at additional offices.
Postmaster: Send change of address to *Woodsmith*, Box 10718, Des Moines, IA 50350.
Subscription Questions? Call 1-800-333-5075, 8:00 am to 5:00 pm, Central Time, weekdays.
E-Mail: augusthome@aol.com
World Wide Web: http://www.augusthome.com

Printed in U.S.A.

EDITOR'S COLUMN

SAWDUST

Traditionally, large storage projects (like cabinets and bookshelves) are designed like any other project: the shelves may be adjustable but that's about it. You don't have a lot of options when it comes to the way the cabinets look or work.

MODULAR CABINETS. But with the modular cabinets featured on page 6, we took a different approach. It's furniture that's designed to change as your needs change. This versatility is the result of working with basic components that can be interchanged and moved around.

It's the same idea as the plastic building blocks that children play with. All you need are a few blocks that fit together. Then they can be arranged to make several different shapes.

In our case the "blocks" consist of one basic cabinet (with an optional deeper cabinet). They can be arranged in a variety of ways depending on your needs. They can even be fitted with doors. With either a wood or glass panel — the choice is yours.

Now with all of the possibilities, you might think that this is a difficult project to build. But that's not the case. Each component is relatively small and easy to work with. So it's not until all components are assembled that this becomes a *large* project.

HARDWARE. Part of the reason that these modular cabinets are so simple to build has to do with the way they're assembled. We used knock-down hardware. This eliminates the need for any complicated joinery (all you have to do is drill a few holes). Best of all, it allows the cabinets to be put together and taken apart with just a screwdriver. Which is a real plus when it comes time to move them.

While the modular cabinets provide a large amount of storage, we also designed three small storage projects for this issue.

CD CASE & PHOTO BOX. First, there's a CD storage case that will hold forty of your favorite CDs. And a photo box that's designed to store dozens of photos. Both projects provide a convenient way to store small items. But it's what you don't see that makes them interesting projects to build.

The CD case on page 18 features a pin support system that makes the CDs appear to float in midair. The challenge is getting the holes for these pins drilled in the right spot. To do this, we used a simple jig that automatically spaces and aligns the holes.

The photo box, shown on page 24, also has a hidden design feature. Instead of hinges, the lid opens and closes on sliding dovetails. But what's unique here is when the lid is closed, the joinery is completely hidden.

ROUTER BIT CABINET. The third small project is the router bit cabinet on page 28. There's nothing hidden here. Dovetail keys highlight the joinery. And the router bits are visible behind a Plexiglas panel door.

NEW FACE. Mike Mittermeier has joined us as Graphic Designer. Mike will be helping with page layout and doing some of the illustrations.

Terry

A LOOK INSIDE

CONTENTS

Features

Modular Cabinets 6

The idea behind these wall cabinets is to allow you to customize the size and arrangement of any number of standardized units. Plus, you can choose between glass or wood paneled doors.

Knock-down Hardware 14

There's nothing tricky about working with knock-down hardware. The secret to making this process quick and accurate is careful layout and a couple shop-built jigs.

CD Storage Case 18

What I wanted was a traditional-looking project to store my favorite compact disc. But I didn't want to use plastic CD holders, so I designed this case with a unique holding system.

Photo Box 24

This weekend project is a simple storage box for 3x5 (and 4x6) photos. To open and close the box, the lid makes use of sliding dovetails. And it also doubles as a photo frame.

Router Bit Cabinet 28

This storage cabinet features a Plexiglas panel, which allows you to see the bits. But what really attracts your attention are the dovetail keys at the corners of the cabinet.

Dovetail Key Joinery 32

Dovetail keys are a great way to strengthen a miter joint. Plus, they're easy to make. All you need is a shop-made jig and a router.

Departments

Tips & Techniques 4
Shop Notes 16
Talking Shop 23
Reader's Jig 34
Sources 35

Modular Cabinets *page 6*

CD Storage Case *page 18*

Photo Box *page 24*

Router Bit Cabinet *page 28*

FEATURE PROJECT

MODULAR CABINETS

This project was designed with flexibility in mind. Standardized units can be mixed and matched with options to create your own custom cabinets.

When designing these cabinets, I had two goals in mind. I wanted them to be flexible so they could be customized. And portable so they could be moved easily.

For flexibility, I designed modular cabinets. In other words, there's one standard cabinet that can be built, multiplied, and arranged in any number of ways. One cabinet can stand alone, or you can stack cabinets on top of each other and place them side-by-side.

Plus, there are several options for each unit. They can be left open or have glass or wood paneled doors. There are bottom units to lift the cabinets off the floor. And a top to give them a finished look. There's even a larger cabinet that's a little deeper than the standard cabinet. The possibilities here are almost endless.

I mentioned another goal in designing these cabinets: portability. To save my back (I'm not as young as I used to be), I built these cabinets using knock-down hardware. It's no more work. In fact, knock-down hardware makes the joinery downright easy. For more on this, see the article that begins on page 14.

Construction Details

Standard Cabinet: *35¼"H x 31"W x 11¾"D*
Deep Cabinet: *35¼"H x 31"W x 15¾"D*
Overall Height: *76"*

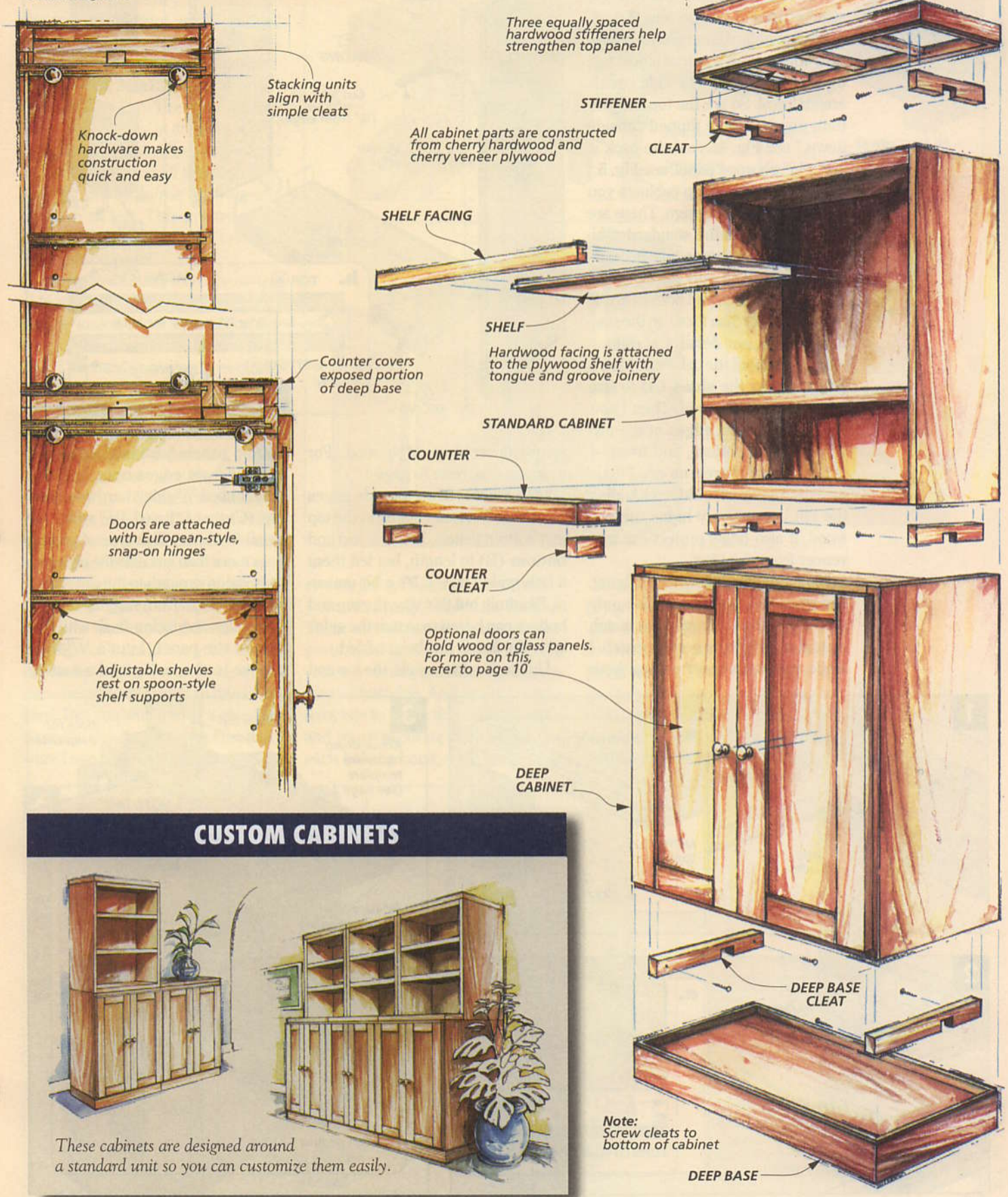

CUSTOM CABINETS

These cabinets are designed around a standard unit so you can customize them easily.

Cabinets

To see just how easy these cabinets are to build, take a look at a single standard cabinet, see drawing at right.

Each standard size cabinet is basically made up of a pair of sides, top, bottom, and back. The side panels are identical. So are the top and bottom; one is simply flipped "upside down," see Fig. 'b'. And the back is just a 1/4" plywood panel, see Fig. 5.

There are also deep cabinets you can build into your design. These are just as simple as the standard cabinets. In fact, the procedure is exactly the same. The only difference is that the sides, top, and bottom are 4" deeper (wider) than those on the standard cabinet, see detail 'a' at right.

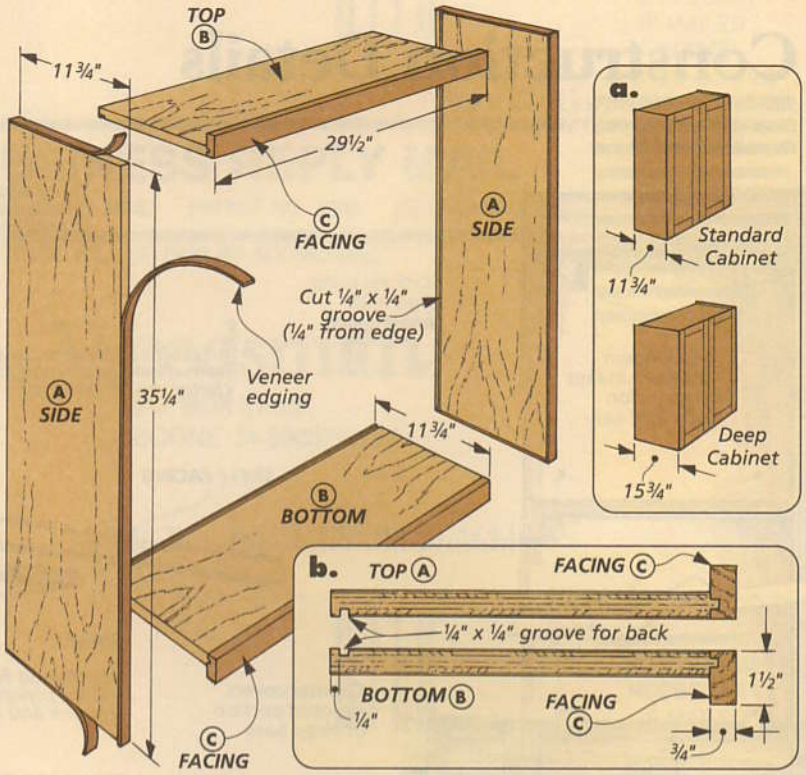

SIDES. To build the cabinets, I started by cutting the **sides (A)** to size from 3/4"-thick plywood. Then I covered the exposed edges of the plywood — top, bottom, and front — with veneer. (There's no need to do the back because it's hidden.) Adding the edging not only hides the plywood, it also helps protect the face veneer from chipping.

Note: You can buy veneer edging, see page 35 for sources. The only problem is the color may not match your plywood. For a perfect match, I made my own veneer edging from some leftover pieces of plywood. (For more on this, refer to page 17.)

TOP & BOTTOM. With the side edges veneered, work can begin on the top and bottom panels. I cut the **top** and **bottom (B)** to length, but left them a little wide (11 1/2"). It's a bit unusual, I'll admit, but this way, the top and bottom can be cut to match the sides *after* the facing has been added.

Unlike the side panels, the top and bottom panels have edging applied to their front edges only. And this time, I used 3/4"-thick hardwood **facing (C)** that I ripped 1 1/2" wide, see detail 'b' above. This type of edging does more than just hide the plywood; it also adds strength to the panels and prevents them from sagging.

To align the facing flush with one face of the panel, I cut a 1/4"-wide groove in the facing and a mating

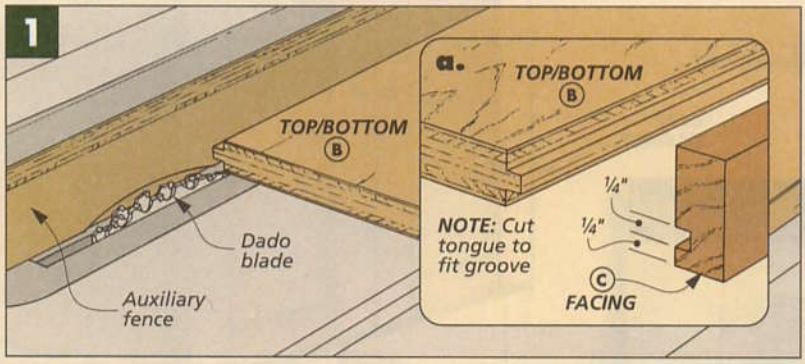

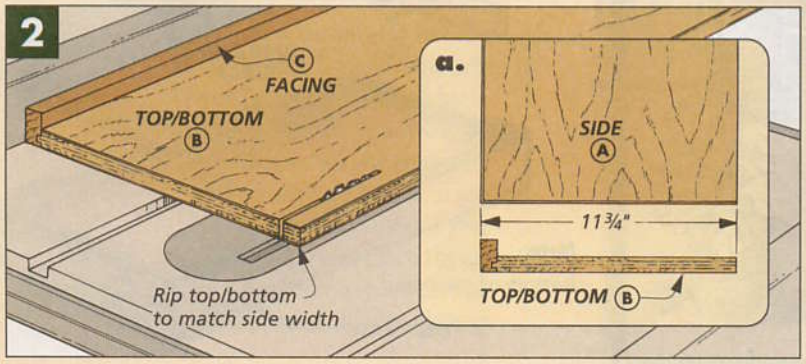

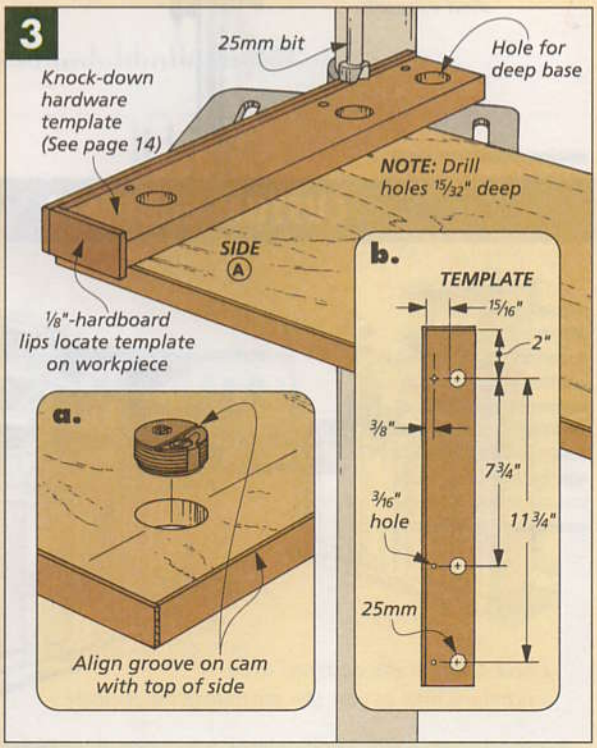

tongue on the panel, see Figs. 1 and 1a. Then I glued them together.

After the glue is dry, it's time to rip the top and bottom panels to final width. The important thing is that they match the width of the side panels, see Figs. 2 and 2a. (The standard cabinets are 11¾". The deep ones are 15¾", see detail 'a' in drawing at left.)

GROOVE FOR BACK. The next step is to cut a groove on all the pieces for holding the back, see drawing and detail 'b' at left. This groove is ¼" deep and just wide enough to hold a ¼" plywood panel.

KNOCK-DOWN HARDWARE. Now the side, top, and bottom panels are ready for the knock-down, cam-action fasteners. (For more on this, see page 14.) This hardware simply requires drilling 25mm holes in the sides and 3/16" holes in the tops and bottoms, see Figs. 3 and 4. To make this as easy and accurate as possible, I made a drilling template, see Fig. 3b.

Note: The drilling template has three sets of holes. This way, it will work with the deeper cabinets as well as the standard ones.

BACK. After the hardware is installed, the next step is to dry assemble the cabinet to measure for the back panel, see Fig. 5. (It fits in the grooves you cut earlier.) After **back (D)** is cut to size, the cabinet is ready to be assembled. But you won't need a glue bottle or any clamps. Because of the hardware I used, the cabinet goes together with just a Phillips screwdriver.

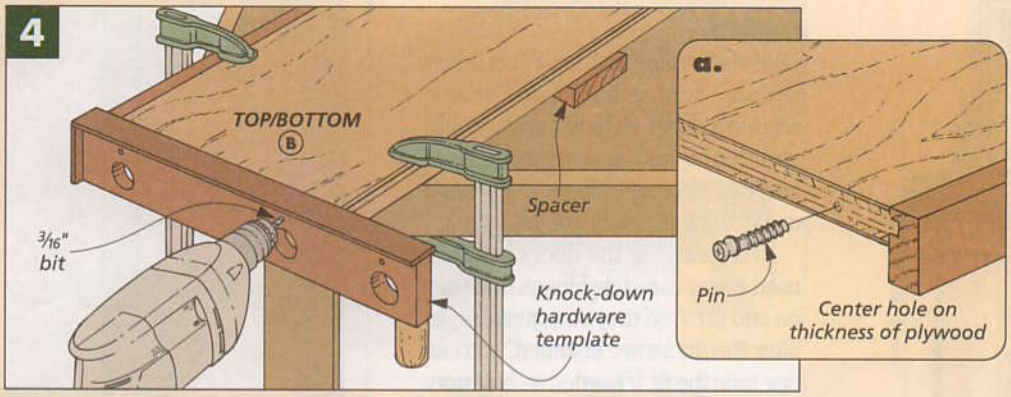

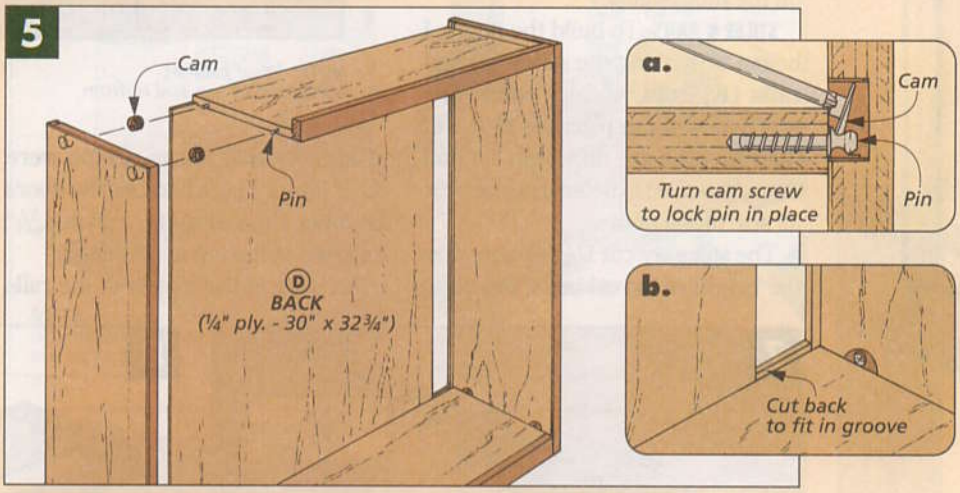

SHELVES. Finally, I added the shelves. These shelves rest on spoon-style supports, see Fig. 6b. So first, I drilled a series of holes to make these supports adjustable. And again, I used a template to make this process faster and more accurate than laying out each hole by hand, see Fig. 6a.

The **shelves (E)** and **shelf facing (F)** are built the same way as the top and bottom panels — tongue and groove joinery. But there are a couple differences. They don't have any grooves at the back, and they're sized to fit *inside* the cabinet. In my case, the finished size of a standard cabinet shelf is 29⅜"-long and 11¼"-wide.

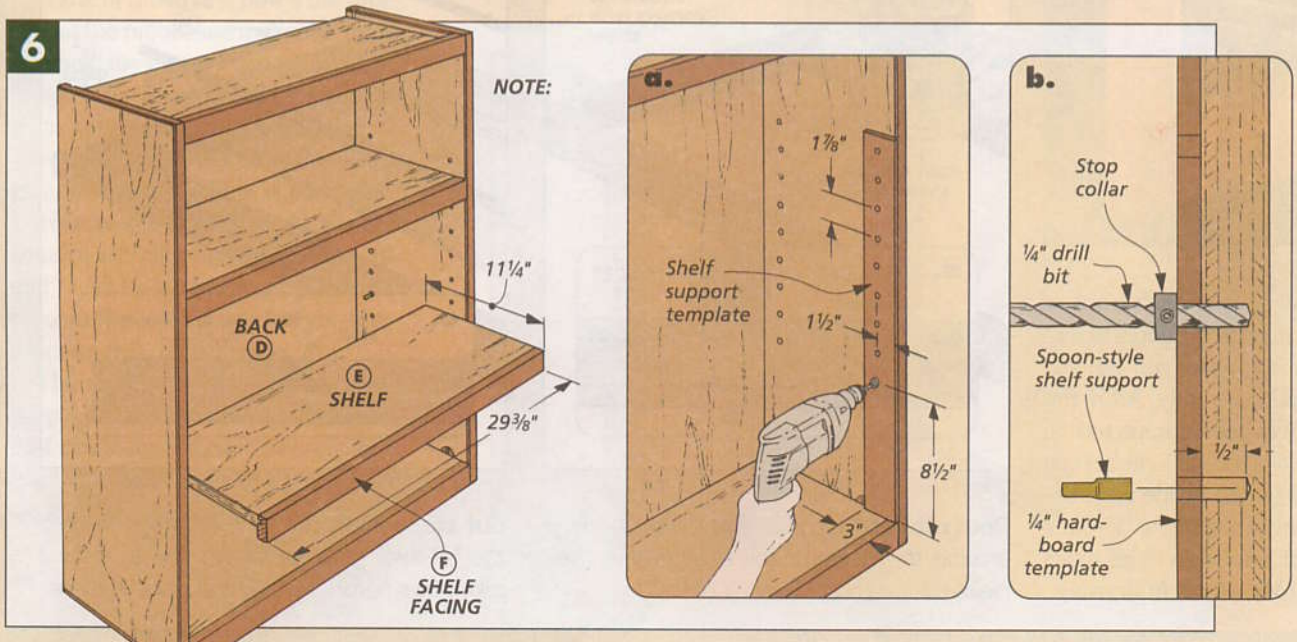

Doors

Like the cabinets, I kept the doors simple. Just a hardwood frame around a panel, all held together with stub tenon and groove joints. And you can choose either 1/4" plywood or 1/8"-thick glass for the panels.

Even hanging the doors is easy. I used European-style hinges that snap on and off. And they're adjustable, so after the doors are installed, you can fine tune the fit, if needed — but more on the hinges later.

STILES & RAILS. To build the doors, I began by making the **stiles (J)** and **rails (K)** from 3/4"-thick stock. The width of all these pieces is 2 1/2". But their lengths are different. To find them, you need to determine the overall size of the doors.

The stiles are cut 1 1/2" shorter than the height of the cabinets, see detail 'a' and drawing above. (Mine were 33 3/4" long.) That's because the doors lay over the cabinets, leaving 3/4" exposed at the top and bottom.

Arriving at the length of the rails takes a little more work. What you want to end up with are two doors with 1/16" of the cabinet exposed on the outside edges and a 1/8" gap between them. Plus, you have to allow for the

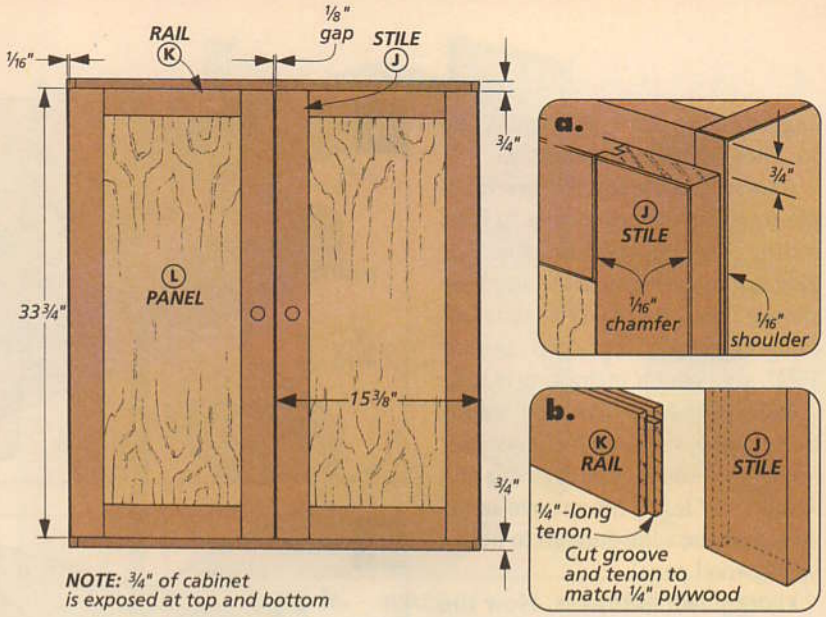

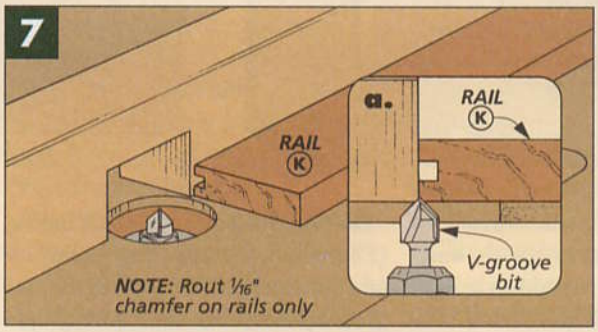

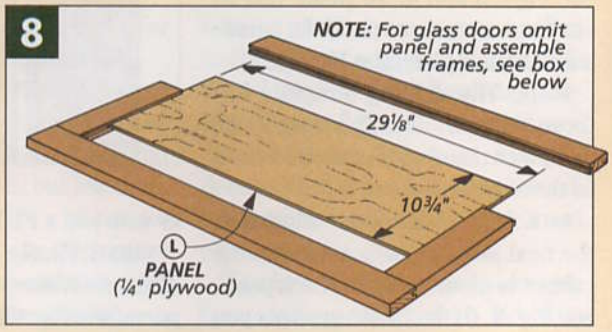

OPTIONAL GLASS PANELS

Even though you don't want to install the glass in the doors before the finish is applied, you can still get everything ready. After the chamfer has been completed on the outside of a door, a rabbet can be routed on the inside face, see left drawing. To hold the 1/8"-thick glass, I cut some thin strips to act as **stops (M)**, see right drawing.

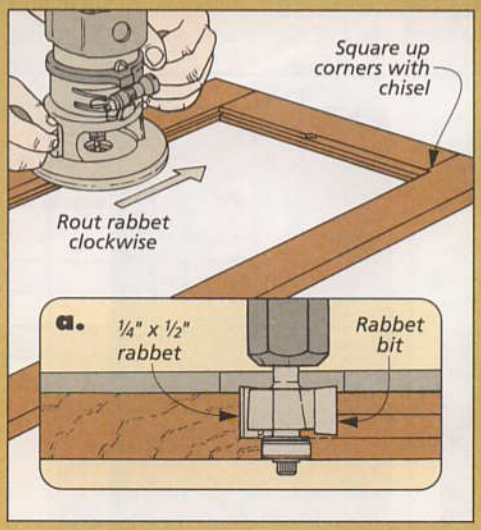

***Rout rabbet**. First, rout a 1/4" rabbet 1/2" deep around the inside of the door frame. Then clean up the corners with a chisel.*

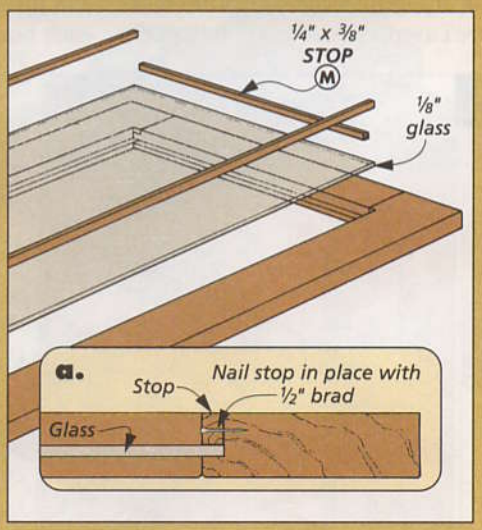

***Cut stops**. Next cut 1/4" x 3/8" stops to hold the 1/8"-thick glass panel. Be sure to predrill pilot holes before tacking the stops in place.*

width of the stiles and the ¼" long tenons on both ends of the rails. (My rails ended up 10⅞" long.)

STUB TENON & GROOVE. Now to join the stiles and rails, first cut a groove on the inside edge of all the pieces, see detail 'b' at left. Then cut stub tenons on the rails to fit in the grooves.

CHAMFER. But before assembling the doors, I turned my attention to adding a decorative chamfer around the front, inside edge of the frame. The way I did this is a bit different than usual; the chamfer is routed in two steps.

For now, I used a V-groove bit to rout a chamfer on the inside edge of the rails only, see Fig. 7. Later, *after* the frame is glued up, I'll rout the chamfer on the stiles, refer to Fig. 9.

ASSEMBLY. Next, the plywood **panels (L)** can be cut to fit inside the frames, and the doors can be assembled, see Fig. 8. Even if you plan on making glass doors (see box on previous page), the door frames can still be glued together at this point.

With the doors glued up, the chamfers can now be completed, see Fig. 9. This chamfer runs the full length of the stile, and any excess glue is routed cleanly away. Simply set the router fence so the bit follows the joint line, see Fig. 9a. Then make a pass along the full length of each stile.

When that's done, rout another small chamfer (1/16") on the outside edge of each door.

GLASS DOORS. If you're adding glass to some of the doors, now's the time to rout the rabbet and make the stops that hold the glass, see the box at left. Note: It's a good idea to install the glass after the finish is applied.

MOUNTING THE DOORS. Now the doors can be mounted. This is easy with European-style hinges. Again, all they require are pilot holes, see Figs. 10 and 11. To make the layout quick and accurate, I used a jig, see margin. (For more on this, refer to page 15.)

The really nice thing about these hinges is that they come apart so each half can be mounted separately, see Fig. 11. Once they're in place, the hinges just snap together, see Fig. 12.

With the doors mounted, the last step is to add a wood knob centered on the stiles, see drawing at right.

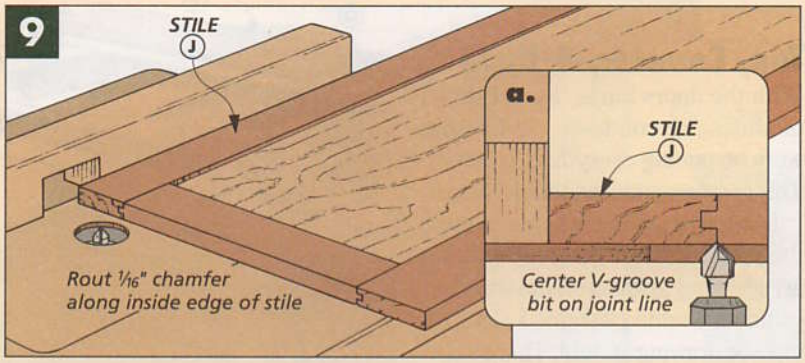

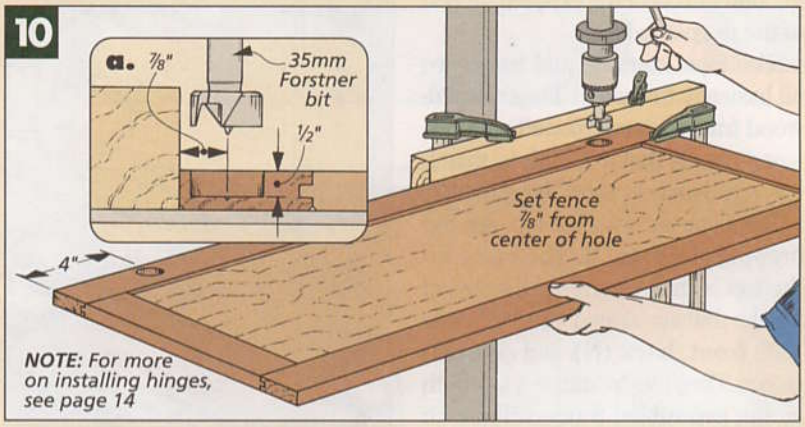

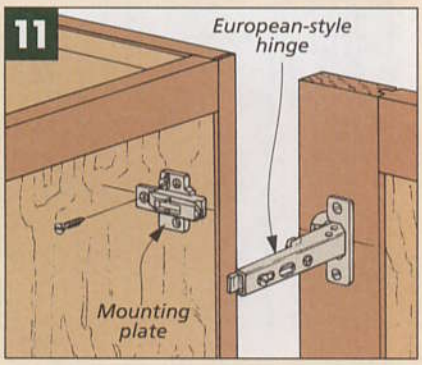

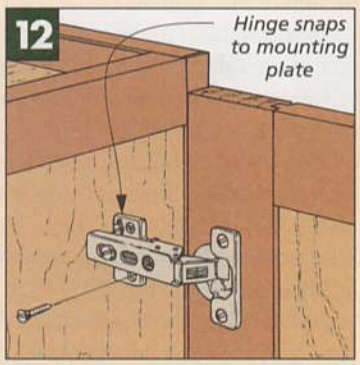

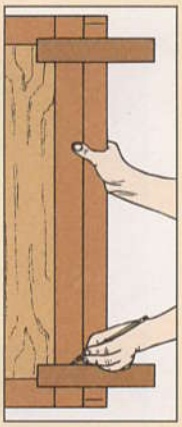

▲ *To align the doors and cabinets when mounting the hinges, I built this layout jig, see page 15.*

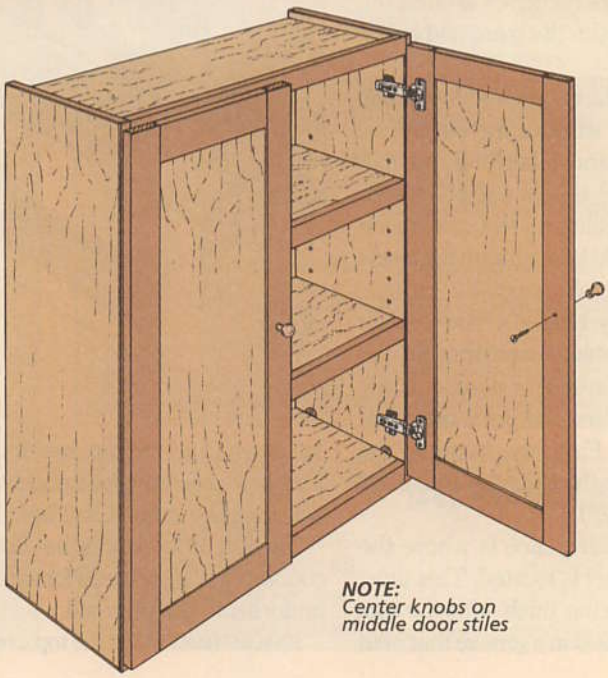

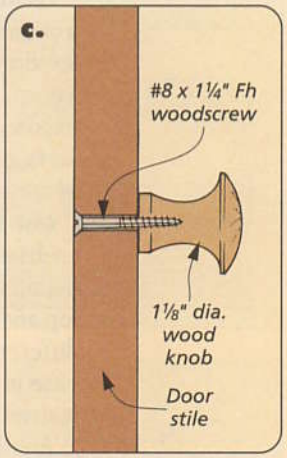

Top, Counter, & Base

With the doors hung, the individual modules are complete. So I began work on putting everything together. This requires some additional pieces.

I added base frames below to raise the cabinets off the floor, see drawing at right. And to finish off the standard cabinets, I added a framed panel on top, see drawing at right. There's also a counter to cover the exposed section of the deeper cabinet.

The tops, counter, and bases are all basically the same. They're hardwood frames strengthened with plywood panels that are built to match the width and depth of the cabinets.

TOP. I started with the top, see the drawing and detail 'a'. The frame for the top is made from ¾" hardwood blanks that are ripped into 1½"-wide (tall) **front, back (N)**, and **side (O)** pieces. Then they're mitered to length so the assembled frame will match the top of the cabinet.

To add stability to the frame, all the pieces are rabbeted to hold a ¼" plywood **panel (P)** flush with the top of the frame, see detail 'a'.

After the frame and plywood panel were assembled, I glued three **stiffeners (Q)** underneath. This adds a little extra support in case anything heavy is set on the top.

And to "hide" the line between the top frame and the cabinet below, I cut a small rabbet (⅛" x ⅛") around the bottom edge on the front and sides, see detail 'a'.

COUNTER. The counter is like a small top unit but without the stiffeners, see drawing and detail 'b'. If you built a deep cabinet, the counter fits into the exposed opening on top, and its top surface should be flush with the inside of the cabinet above.

BASE. Finally, I added a base beneath each set of cabinets, see drawing and detail 'c'. The base is similar to the top and counter, but there are three differences. First, the frame of the base is taller than the top frame (4" instead of 1½").

Another difference is where the plywood panel is located. This time, instead of being flush with the top, the panel is held in a groove that's cut ¾" down from the top, see detail 'c'. This provides room for the cleats that will align the cabinet and base later.

The last difference is that (like the counter) there's no need for stiffeners underneath the plywood.

FINAL ASSEMBLY. After the top, counter, and base frames are complete, it's time to put the whole thing together.

To hold the cabinets together side-to-side, I used connector bolts, see Fig. 13. (They're not needed if you're only building one set of cabinets.)

To stack the cabinets, I added

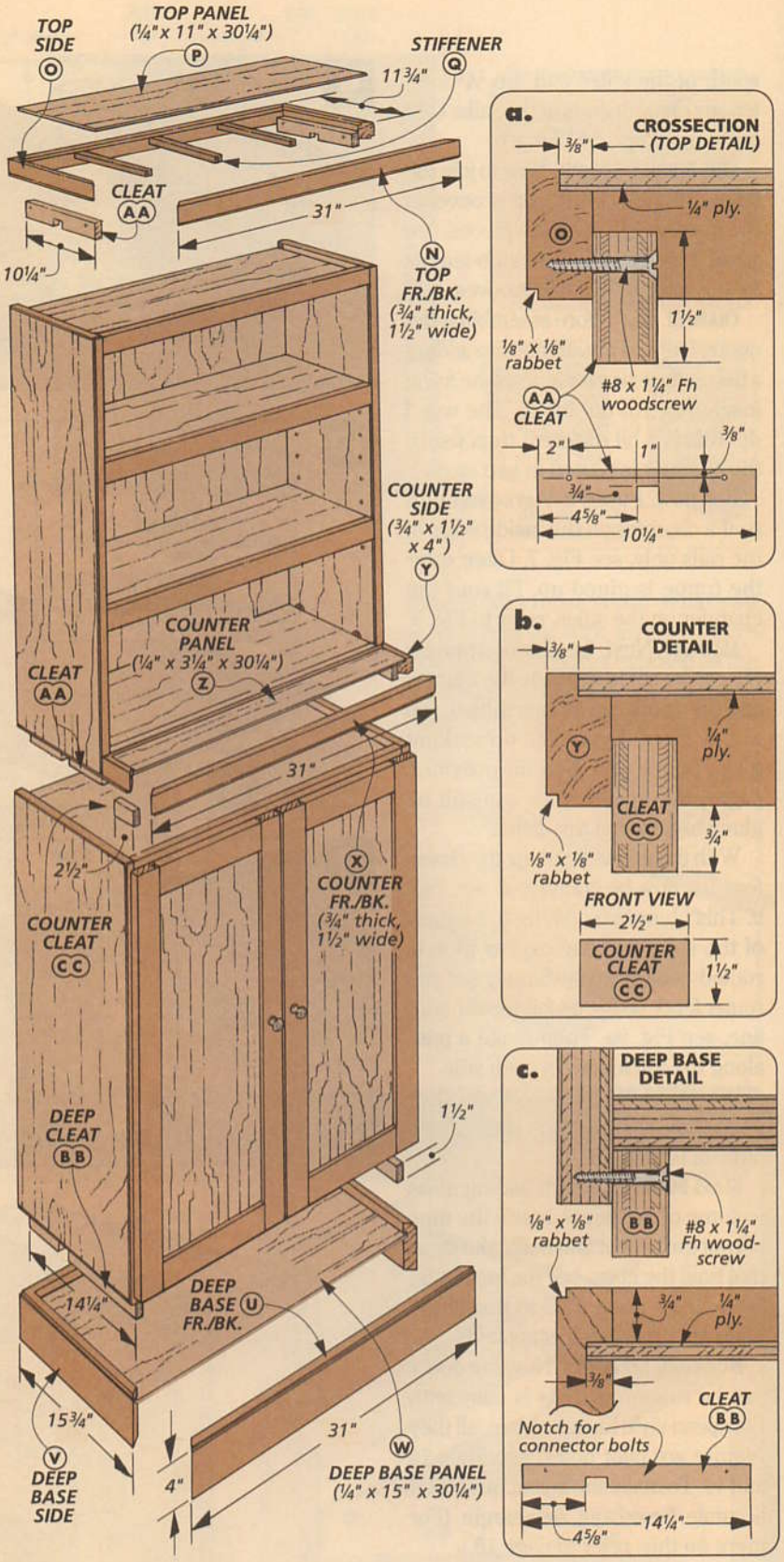

cleats (AA, BB) to keep them aligned, see drawing at left. The plywood cleats are 1½"-wide with a notch cut in them to provide access for the connector bolts.

The cleats are screwed underneath the top frame and the cabinets, see details 'a' and 'c' at left. The important thing here is to leave the bottom half of the cleat exposed. This exposed part of the cleat fits into the cabinet (or base) below.

The counter also gets two **cleats (CC)**. But these are simply glued in place, see detail 'b' at left. W

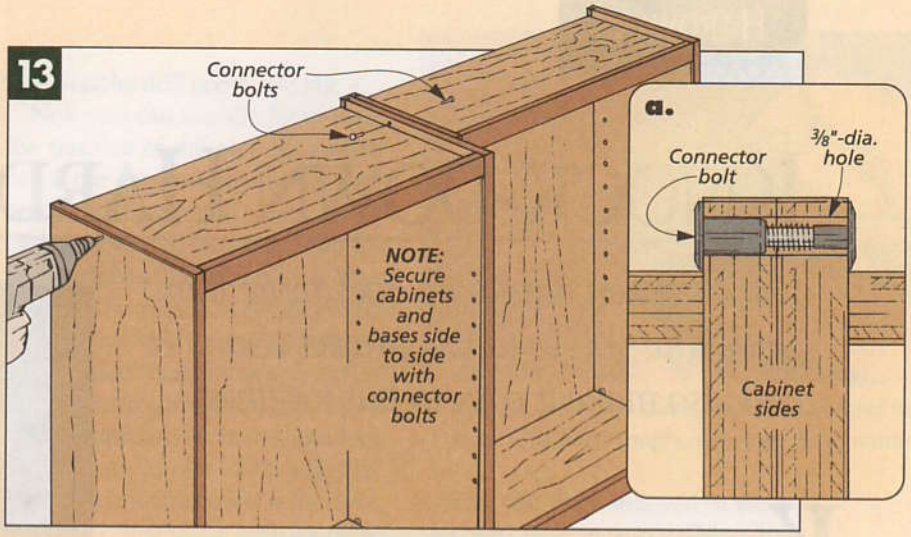

MATERIALS

STANDARD CABINET	
A Sides (2)	¾ply. - 11¾ x 35¼
B Top/Btm. (2)	¾ply. - 11¼ x 29½
C Top/Btm Facings (2)	¾ x 1½ - 29½
D Back (1)	¼ply. - 30 x 32¾
E Shelves (2)	¾ply. - 10¾ x 29⅜
F Shelf Facings (2)	¾ x 1½ - 29⅜
DEEP CABINET*	
G Dp. Sides (2)	¾ply. - 15¾ x 35¼
H Dp. Top/Btm. (2)	¾ply. - 15¼ x 29½
I Dp. Shelves (2)	¾ply. - 14¾ x 29⅜
DOORS	
J Stiles (4)	¾ x 2½ - 33¾
K Rails (4)	¾ x 2½ - 10⅞
L Panels (2)	¼ply. - 10¾ x 29⅛
M Stops	¼ x ⅜ - 16 lineal ft.
TOP	
N Front/Back (2)	¾ x 1½ - 31
O Sides (2)	¾ x 1½ - 11¾
P Panel (1)	¼ply. - 11 x 30¼
Q Stiffeners (3)	¾ x ¾ - 10¼
STANDARD BASE	
R Front/Back (2)	¾ x 4 - 31
S Sides (2)	¾ x 4 - 11¾
T Panel (1)	¼ply. - 11 x 30¼
DEEP BASE	
U Dp. Front/Back (2)	¾ x 4 - 31
V Dp. Sides (2)	¾ x 4 - 15¾
W Dp. Panel (1)	¼ply. - 15 x 30¼
COUNTER	
X Front/Back (2)	¾ x 1½ - 31
Y Sides (2)	¾ x 1½ - 4
Z Panel (1)	¼ply. - 3¼ x 30¼
CLEATS	
AA Cleats (4)	¾ply. - 1½ x 10¼
BB Dp. Cleats (2)	¾ply. - 1½ x 14¼
CC Counter Cleats (2)	¾ply. - 1½ x 2½

*Also Needed: Facings (C & F) and Back (D)

CUTTING DIAGRAM

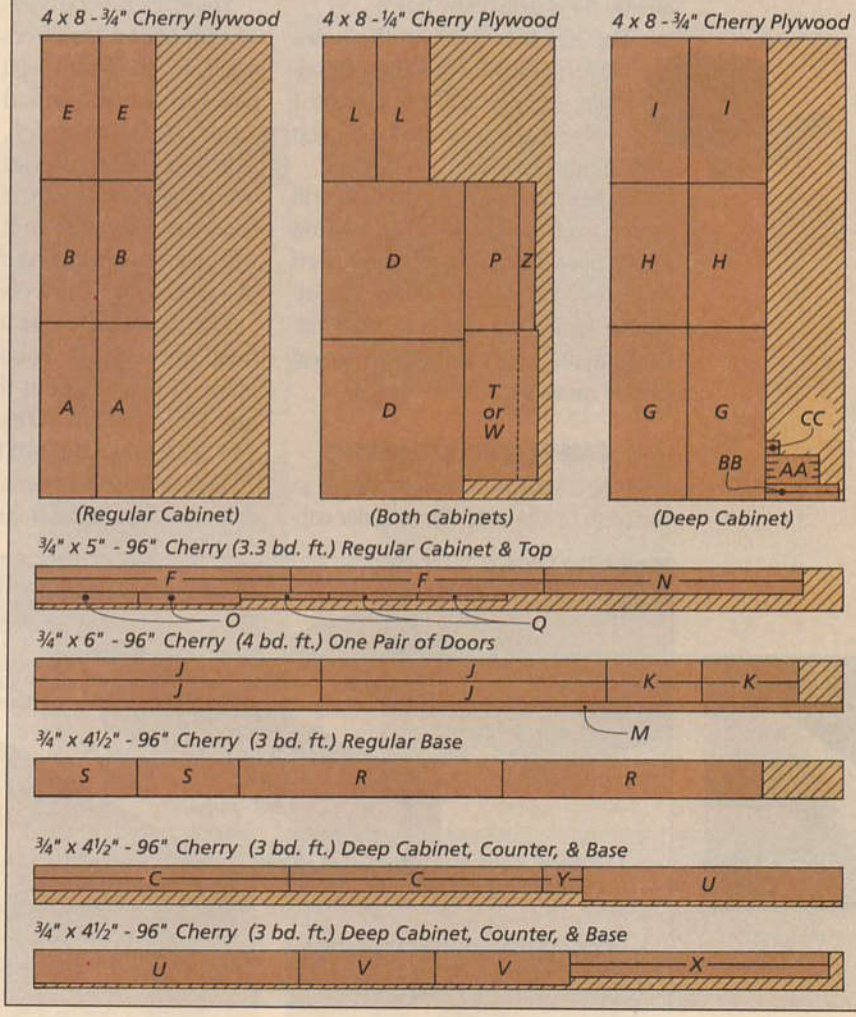

SUPPLIES

- #8 x 1¼" Fh Woodscrews
- Blum Knock-down Fittings
- 125° Overlay Hinges
- Connector Bolts (optional)
- Spoon-style Shelf Supports
- 1⅛"-dia. Wood Knobs

Note: The quantity of supplies will vary depending on the number of cabinets built.

KNOCK-DOWN HARDWARE

Knock-down hardware does more than just allow you to take a project apart. It can also make it easy to put together.

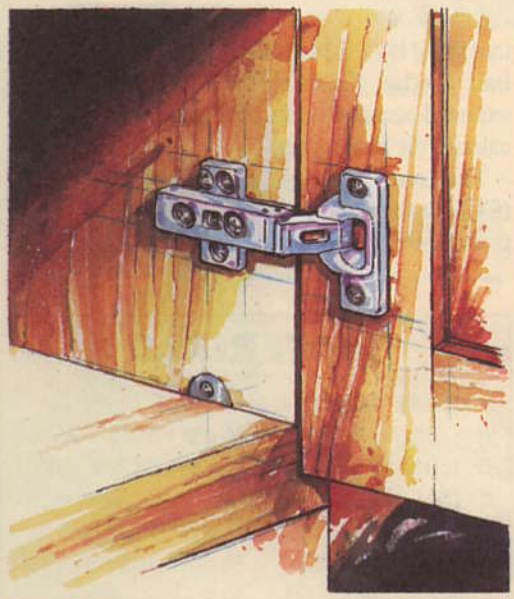

Knock-down hardware makes joinery downright easy. It's a quick way to put a project together (and be able to take it apart again). Usually all you do is drill a few holes.

The key is to position the holes accurately. So whenever possible, I use a drill press. And I rely on templates to help keep things precise.

What's unusual is you have to drill some metric-sized holes. (Most knock-down hardware was developed in Europe.) But don't worry. A metric bit works just like any other bit. And you don't necessarily have to use metric measurements.

CAM-ACTION FASTENERS

I've used knock-down hardware in the past. But to hold the modular cabinets together, I chose some hardware I hadn't tried before: cam-action fasteners.

There are several types of cam-action fasteners available. The ones I used have two pieces: a pin and a cam, see photo at left. The pin looks like an overgrown woodscrew. It has coarse threads so it will grip when screwed into the edge of a piece of 3/4"-thick plywood.

The metal cam that locks on the head of the pin is housed inside a piece of plastic about the size of a quarter. A Phillips screwdriver is all you need to put the two together.

To install the fasteners, you need to drill two different size holes: a 5mm pilot hole for the pin (I used a 3/16" bit) and a 25mm flat-bottomed hole for the cam. (Here's where you'll need a metric bit. For sources, see page 35.)

The pins are centered on the thickness of a workpiece. The cams on the mating piece are offset 8mm (about 5/16") from the center of the pin (the center of the workpiece), see Fig. 1b.

Of course, for the modular cabinets there were a lot of holes to drill. Rather than laying out each one, I made a drilling template, see Fig. 1. And since I was dealing with two different size cabinets, I made one template to handle both (that's why there are three sets of holes instead of two).

But the hole position isn't the only thing that's important. The depth for the cam has to be set properly too, see tip in margin at left.

With the jig built I didn't just start drilling holes in the modular cabinets. It's a good idea to test the setup on some scrap pieces first.

Finally, to install the hardware, just screw the pin in place and tap the cam in lightly with a rubber mallet. Be sure to keep the groove on the face of the cam parallel with the top edge of the plywood, see Fig. 1a.

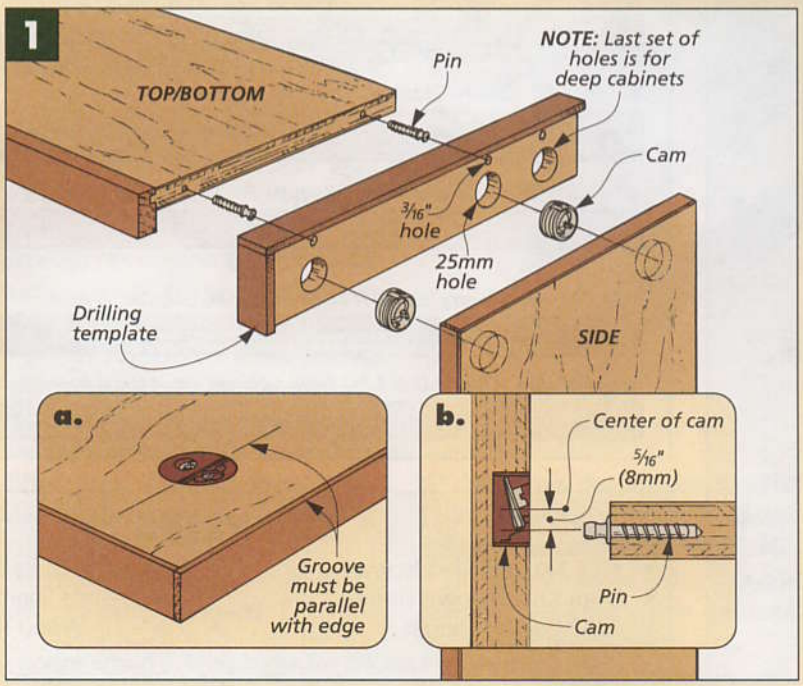

▲ *To set the proper hole depth for a cam-action fastener, drill a hole in the edge of a test piece.*

Snap-on Hinges

To hang the doors on the cabinets, I used European-style hinges. I've used them before and knew they were easy to install. But the hinges I chose this time had an added feature — they snap on and off, see photo at right.

These hinges come in two parts. The actual hinge attaches to the door stile, while a mounting plate is attached inside the cabinet.

What's nice is that the hinge parts mount separately. But this means they must align exactly. Here again, I made a jig to help out, see Fig. 2. The jig matches the height of the door and has a pair of wings for laying out the centers of the hinges and plates.

To use the jig, I lay out the centers of the hinges on the door stiles, see Fig. 3. Then I drill the 35mm (or 1⅜") holes on the drill press, see Fig. 4.

Now you can use the jig to mark the position of the mounting plate. Since the doors overhang the cabinets ¾" at the top and bottom, I drew marks on the jig that align with the inside edges of the cabinets, see Figs. 2 and 5. Then I marked the location of the back screw of the mounting plate.

To attach these hinges, I started with the mounting plates, see Fig. 6. I only install a screw in the back hole so the plate can be easily adjusted. Then I screw the hinge to the door, see Fig. 7. Just make sure it's parallel with the edges of the door.

Now snap the hinge and plate together and add the last two screws in the plate, see Fig. 8. (This ensures the hinge and plate are aligned.)

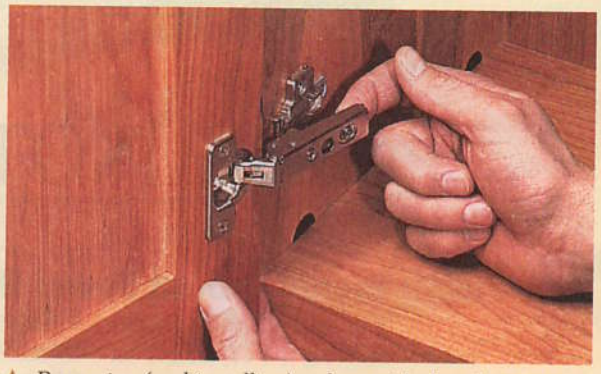

▲ *Removing (and installing) a door with these hinges is a snap. The hinge simply clips onto the mounting plate.*

With the door snapped in place, you don't have to worry if it's a little bit crooked. The fit can be adjusted in three ways, see Fig. 9. There are three screws on the mounting plate that move the door ⅛" in and out, up and down, and side to side. W

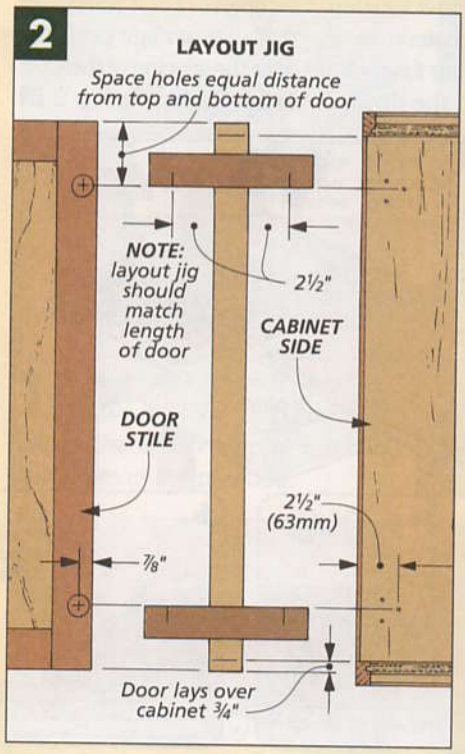

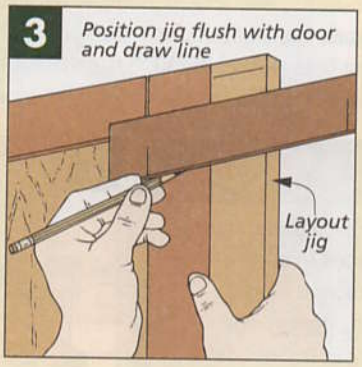

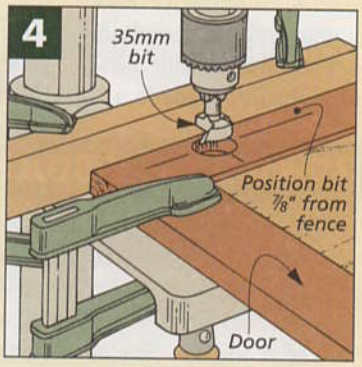

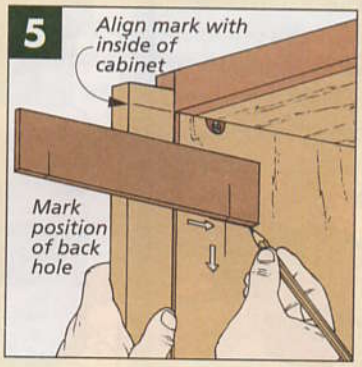

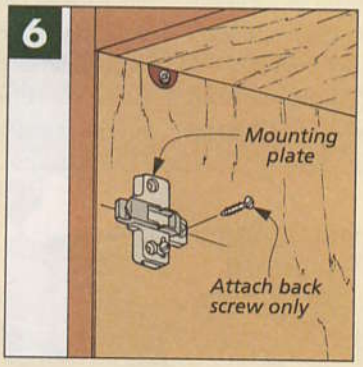

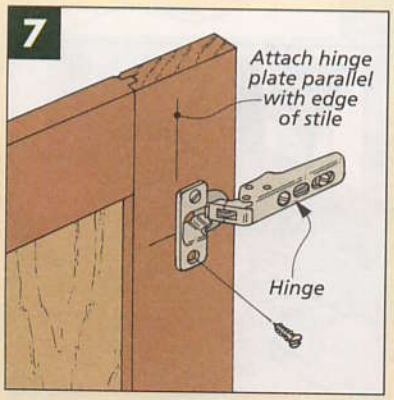

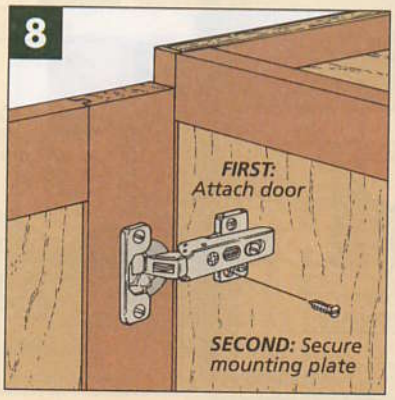

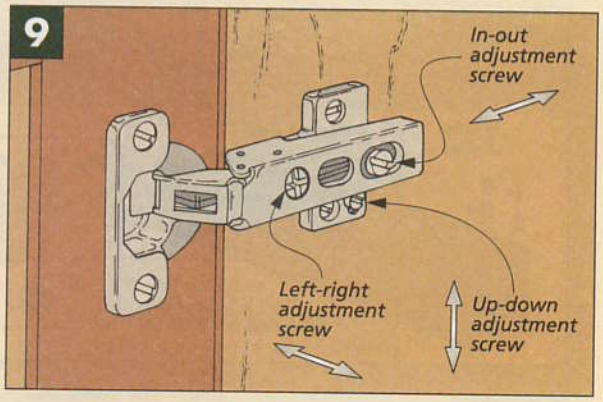

SHOP NOTES

Evenly Spaced Dowel Holes

The biggest challenge to building the CD holder on page 18 is making the support posts. The holes for the small pins that fit into these posts have to be drilled in a straight line. On top of that, these holes also have to line up with the ledges already installed in the dividers.

I took care of both problems with a simple jig. First, to support the dowel and get the holes drilled in a straight line, I made a V-block, see box below. Then to make sure the alignment between the pins and the dividers is perfect, I added an index pin to the bottom of the V-block. The extra divider will be used for an index template.

SETUP. This jig is easy to set up. First, I used carpet tape to hold the dowel in place (flush with the end of the V-block), see Fig. 1. Now mark the location for your first hole and set the V-block and divider on the drill press table.

It only takes a few minor adjustments before the holes can be drilled. To start, I placed the index pin on the V-block in the first divider slot. Then move the drill press fence until the drill bit is centered over the dowel, see Figs. 1a and 1b. Now slide the divider until the drill bit is centered over the mark for your first hole. Finally, clamp the divider to keep it from moving.

USE. Then move the index pin from slot to slot on the template. Now holes are drilled that align perfectly with the spacing of the slots in the divider, see Fig. 2. W

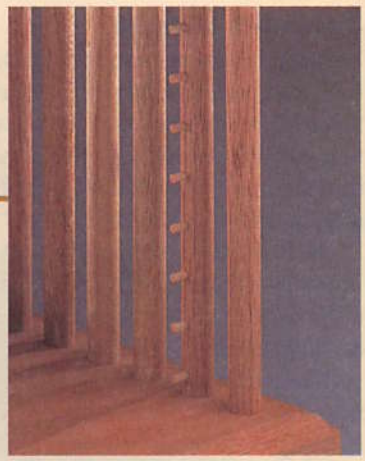

▲ *The key to holding the CDs is to drill evenly spaced holes in the support posts for the 1/8" pins.*

MAKING THE V-BLOCK

Before the pin holes can be drilled in the dowels, you'll need to make a V-block to hold them. The V-block does more than just hold the dowels. It's also part of an indexing jig to help get the holes in the dowels aligned on the same level as the ledges in the dividers.

To make the V-block, start with a piece of "two-by" stock. Then tilt your blade to 45° and make a partial cut in both faces to create the V-shape, see drawings below.

Now a 1/8"-dia. dowel can be installed in the center of the V-block for an indexing pin. This pin fits in the slots in an extra divider. Drill a hole through the center and glue a short piece of dowel in the bottom, see bottom drawings.

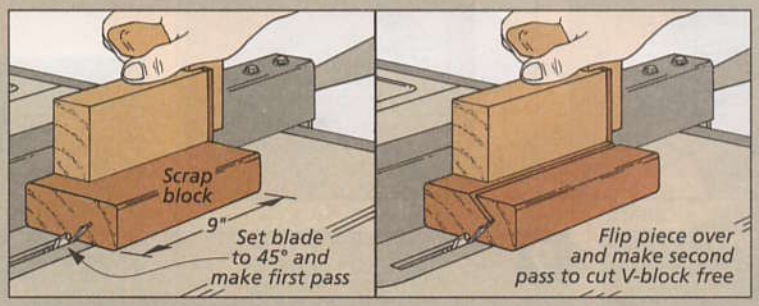

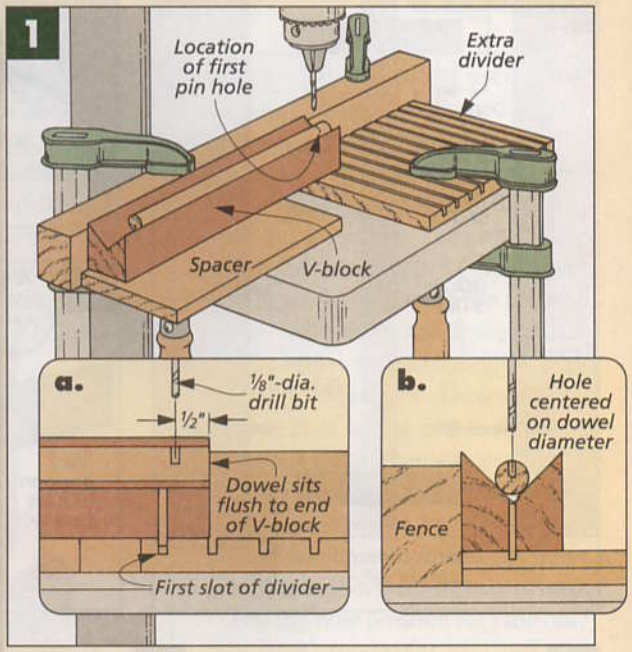

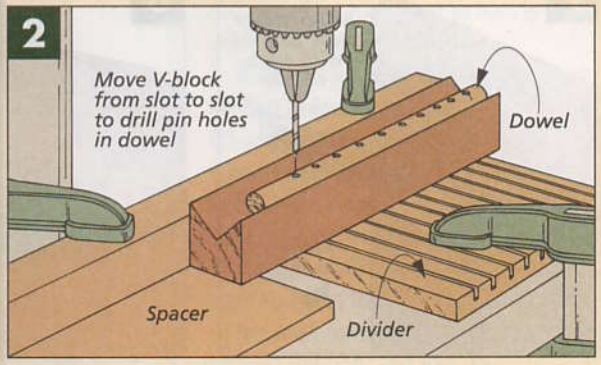

Veneer Edging From Plywood

Veneer edging tape is a convenient way to cover a plywood edge. But the color doesn't always match between the tape and the plywood. This was the case with the modular wall cabinets (refer to page 6).

To solve this problem, I tried something a little different. I made edging strips by removing the veneer from leftover plywood used on the project. This way the color matches, and it's easy to cut additional edging strips as needed.

Making your own edging isn't difficult, but it does take a few steps. First, cut pieces a little wider than the edges to be covered. Then rip the veneer from these pieces, see Steps 1 and 2.

Next, I used my belt sander to remove the thin layer of core material that's left on the back side of the veneer, see Step 3.

Finally, the edging can be glued to the plywood with a couple coats of contact adhesive. I like to start on the ends and then do the front, see Steps 4 and 5.

Since the edging is cut extra wide, it needs to be trimmed flush with the plywood face, see Step 6. A sanding block makes fast work of getting the veneer edges smooth. W

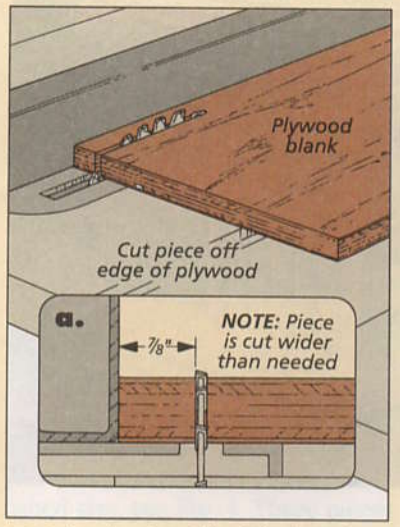

1 *To begin, rip a 7/8"-wide piece from a plywood blank. This extra width allows the veneer strip to overhang the edges of the plywood.*

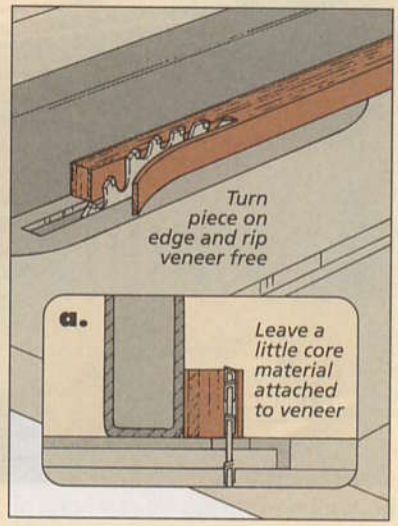

2 *Now, to cut the veneer free, turn the piece on edge. Set the rip fence to remove the veneer and about 1/32" of the core material.*

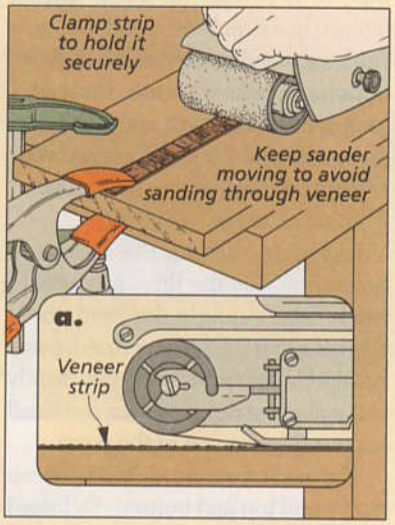

3 *A belt sander makes quick work of removing the core material from the veneer. I clamp the strip to a backing board to hold it in place.*

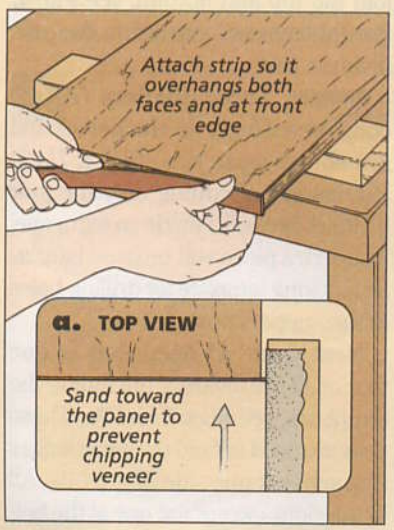

4 *To attach the edging on the ends of the plywood, I use two coats of contact adhesive. Then I sand the ends flush, see detail.*

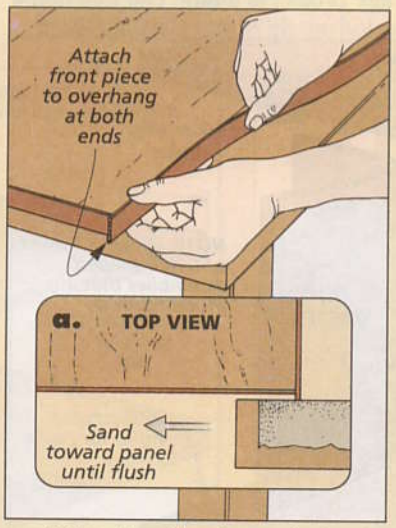

5 *With the side pieces flush, the veneer on the front is installed. Overlap the ends, then sand the veneer flush with the ends.*

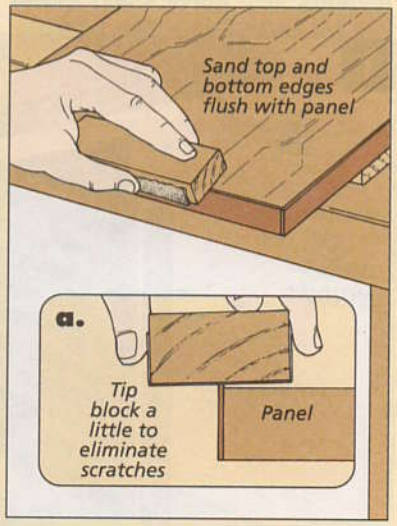

6 *To trim the sides of the edging, sand them lightly with a sanding block. Tip the sanding block slightly to avoid cross-grain scratches.*

CD STORAGE CASE

To support the 40 CDs in this case, we used a unique "pin and ledge" system that makes the CDs appear to float in midair.

There are a lot of ways to "store" CDs (compact discs). They can be stacked in a pile, filed in a shoe box, or if you spend a few bucks, housed in a simulated wood, CD rack. But as a woodworker, none of these options appealed to me. Instead, I took a little different approach and designed this CD storage case with several unique features to set it apart from other cases.

Like most cases, the CDs are stored horizontally so the titles are easy to read. What's a little different about this design is the CDs seem to be suspended in midair. If you look closely at the photo at right, you can see small support pins in one of the posts.

The posts are sandwiched between a plywood top and bottom. So I used several layers of molding on top to conceal the plywood. I also added molding to the bottom. But not to just conceal the plywood edges. This molding also hides a lazy susan turntable. This turntable makes it easy to spin the case around to any side so all the CDs are accessible.

CASE. Building the case for this storage project is a little like building a house of cards. You have to start in the middle and work your way out. Located in the center are four dividers that not only hold the discs, they also join the top and bottom, see Fig. 1. For this reason I started on the case dividers first.

DIVIDERS. These **dividers (A)** are constructed from ½"-thick stock and are all the same size (5½" x 7⅞"). But instead of cutting only the four dividers needed, I made an extra one. This extra piece will be used later as an indexing template for drilling holes in the support posts.

Next, I cut ¼"-deep slots in one face of all the dividers (including the template), see Figs. 2 and 2a. These slots are used to hold the small ledges that support one side of the CDs. All of the slots, except the one at the bottom, are spaced ¾" apart. The bottom slot is positioned half this distance (⅜") up from the bottom edge.

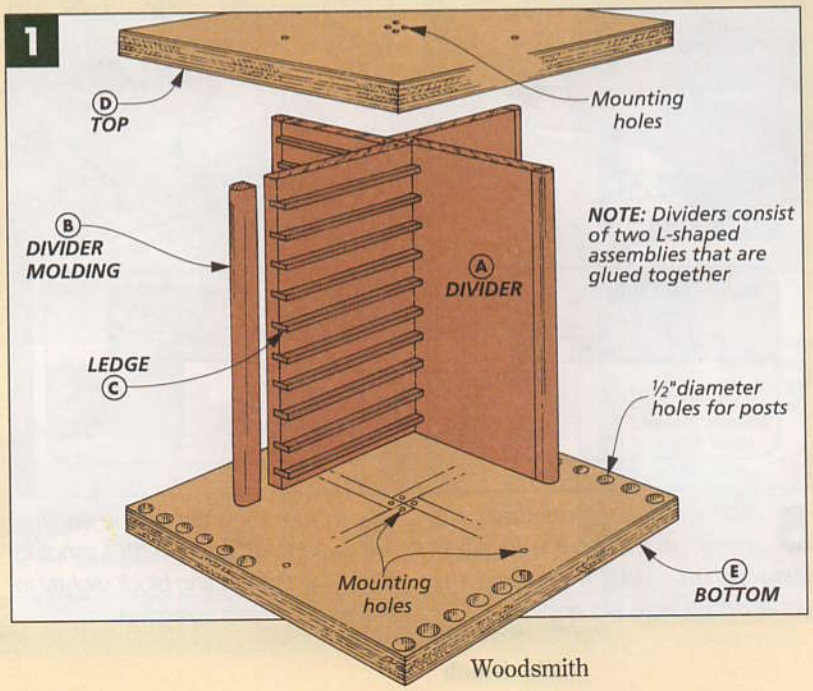

DIVIDER MOLDING. To make the ends of the dividers look similar to the posts around it, I glued a piece of molding to the front edge. This **divider molding (B)** is a ½" square piece of stock cut to match the divider blank length (7⅞") with a full roundover routed on the front edge, see Figs. 3 and 3a. Note: Because the bottom slot on the divider is offset differently from the other slots, the molding must be installed with the slots located on the right-hand side, see Fig. 3.

DIVIDER ASSEMBLY. With the molding rounded over, the dividers can be assembled in pairs, see Fig. 3. This is simply a matter of gluing the back edges together so you end up with an L-shaped assembly.

LEDGES. Next, to fill the slots in the divider assemblies, I used small **ledges (C)**. Since you need 40 ledges, an easy way to cut them is off the edge of ½"-thick blank, see Fig. 3b. If you make the blank length the same as the slot length (5½"), the ⅛"-thick ledges can be sliced off like pieces of bacon. Then you simply glue the ledges in the dividers.

TOP/BOTTOM. At this point, the dividers can be set aside, and you can cut the **top (D)** and **bottom (E)** to finished size, see Fig. 4. These pieces of ¾" plywood sandwich the dividers and the posts. To hold these ½"-diameter posts in position, holes are drilled around the perimeter of both pieces.

The only thing that you need to keep in mind is to lay out the hole location on both pieces so they're mirror images of each other. Before drilling any holes, I positioned the top piece over the bottom and checked to make sure the holes would line up.

DIVIDER INSTALLATION. With the holes drilled for the posts, the dividers can be screwed to the *bottom* of the case, see Fig. 5a. The important thing is to install the dividers so the front edges line up with the post holes. Then mark the mounting hole locations, drill ⅛"-diameter mounting holes, and install

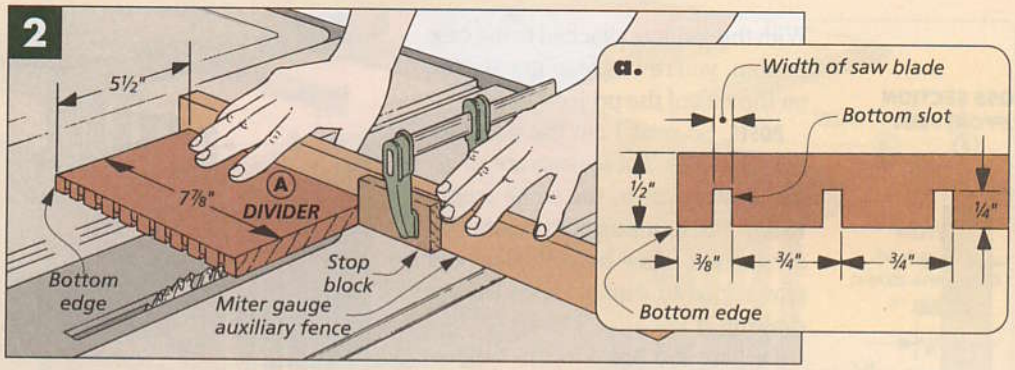

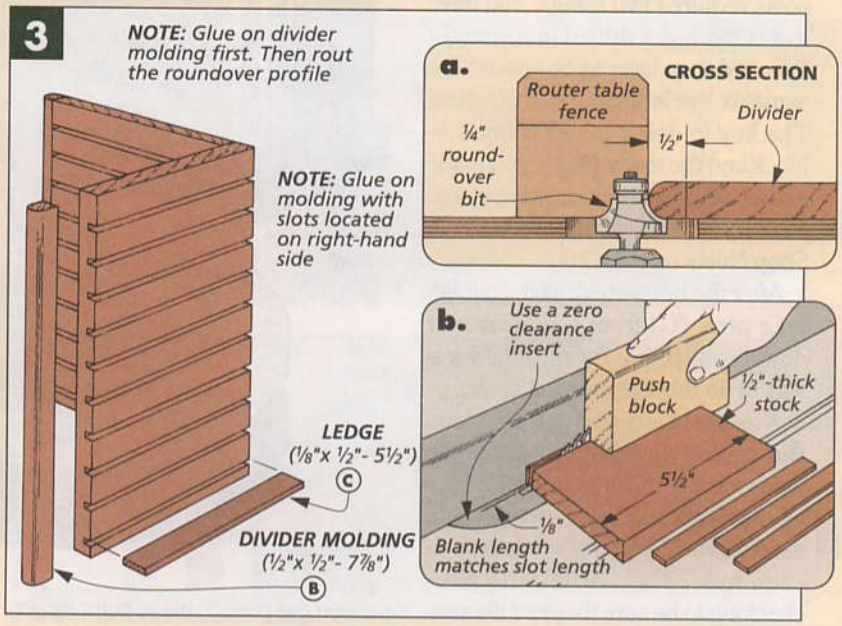

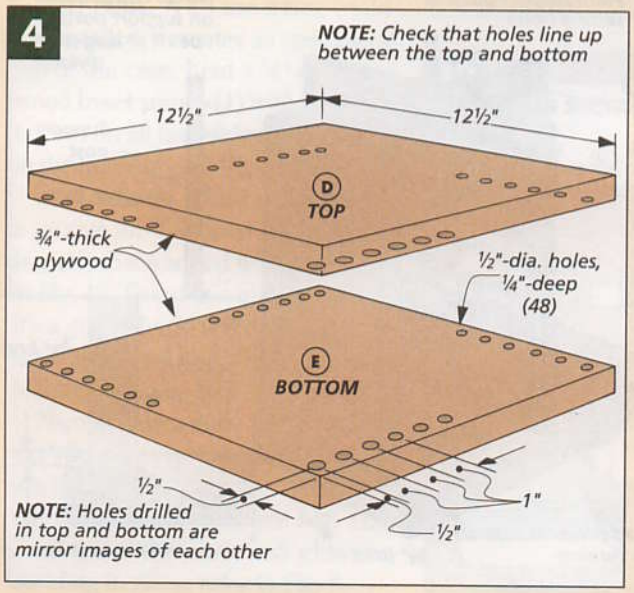

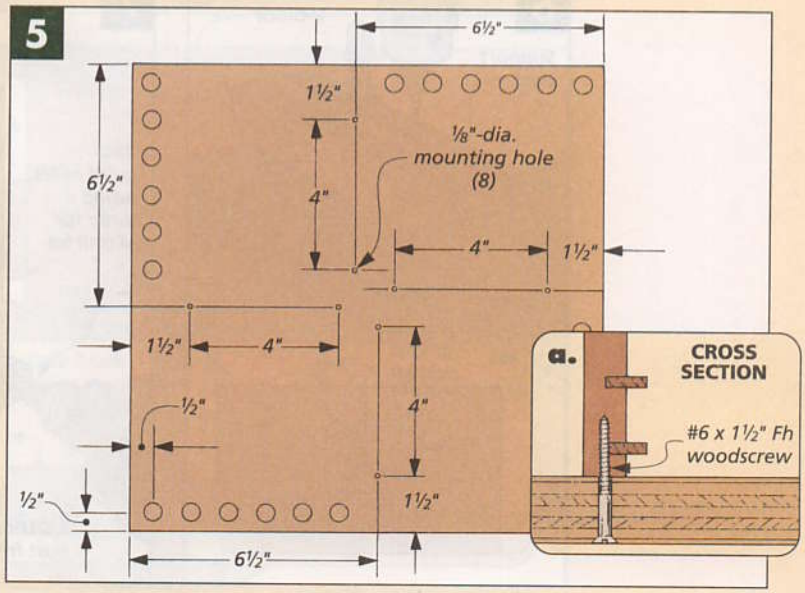

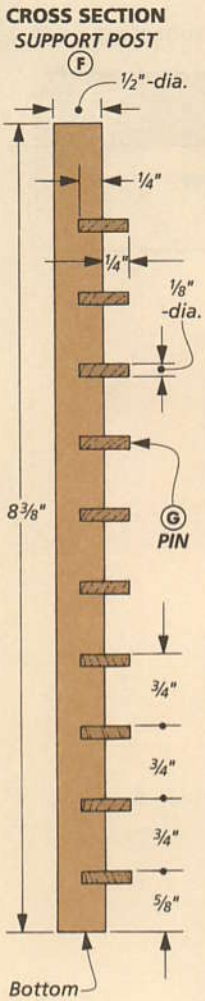

With the dividers attached to the case bottom, you're ready to get started on the rest of the project.

POSTS. So next I cut the posts for the case sides. These posts are all ½"-dia. dowels cut to the same length (8⅜"). But four **support posts (F)**, are unique. They have ⅛"-diameter pins added to support the CDs, see drawing at left.

Drilling the holes in the support posts requires two things. You have to get the holes drilled in a straight line, and they have to be spaced the same as the ledges in the dividers. The key to doing this is using a V-block and the extra divider you made earlier, see Fig. 6 and drawing at left. For more on this technique, refer to Shop Notes on page 16.

After the holes are drilled, I cut ½"-long **pins (G)** from a ⅛"-diameter dowel to fill them. For me, the safest way to do this is with a handsaw.

Now the pins can be glued in place. But getting glue in these small pin holes without making a mess is about as easy as threading a needle. So I used a toothpick to place a drop in each hole. Then install the pins, checking to be sure they're fully seated in the pin holes, see left margin.

ASSEMBLY. Now the case can be assembled. The first pieces to install are the support posts. They fit in the second hole of each section on the case bottom, see Fig. 7. But keep in mind as you install these posts that the pins on the posts have to point directly at the ledges on the dividers so they fully support the CDs.

To keep the support posts from turning, I put a little glue in the holes first. Then just to make sure they wouldn't move, I also pinned them with a small brad, see Fig. 7. Now put a little glue in the rest of the holes and install the other posts.

TOP. With all the posts in place, the top (D) can be installed, see drawing above. Since screws connect the top to the dividers you won't need any glue. It's a good thing too. Otherwise, glue would drip all over the place.

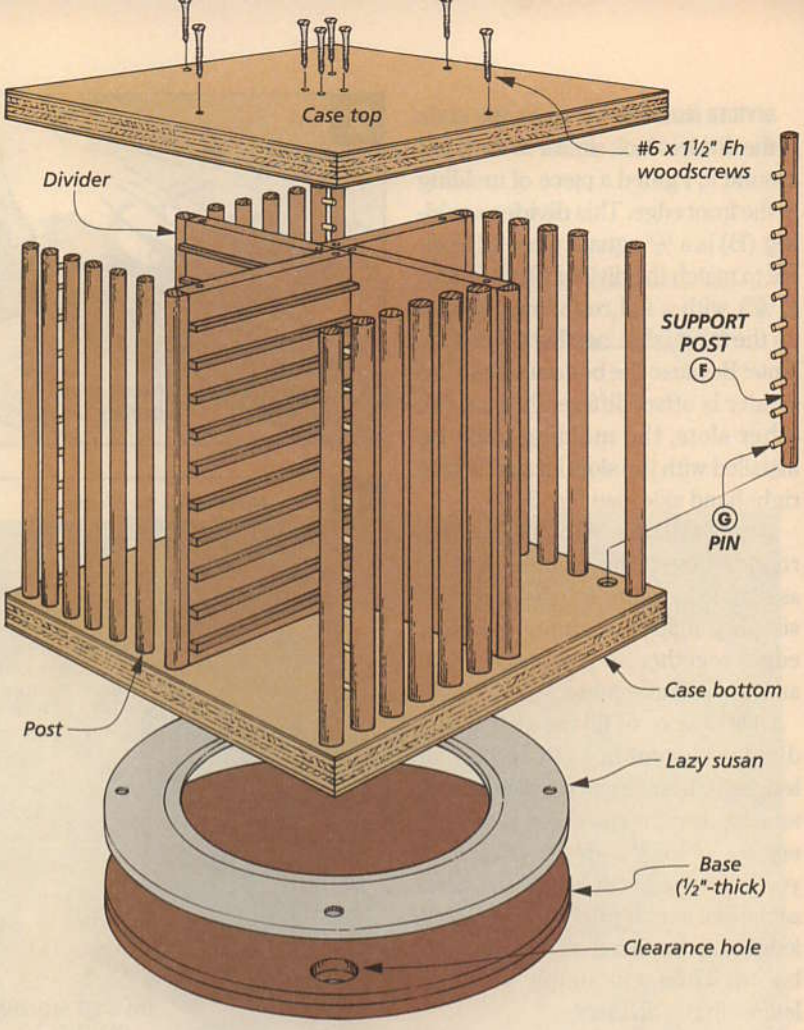

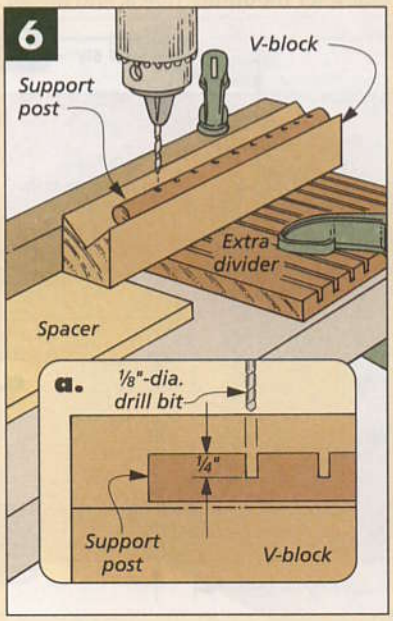

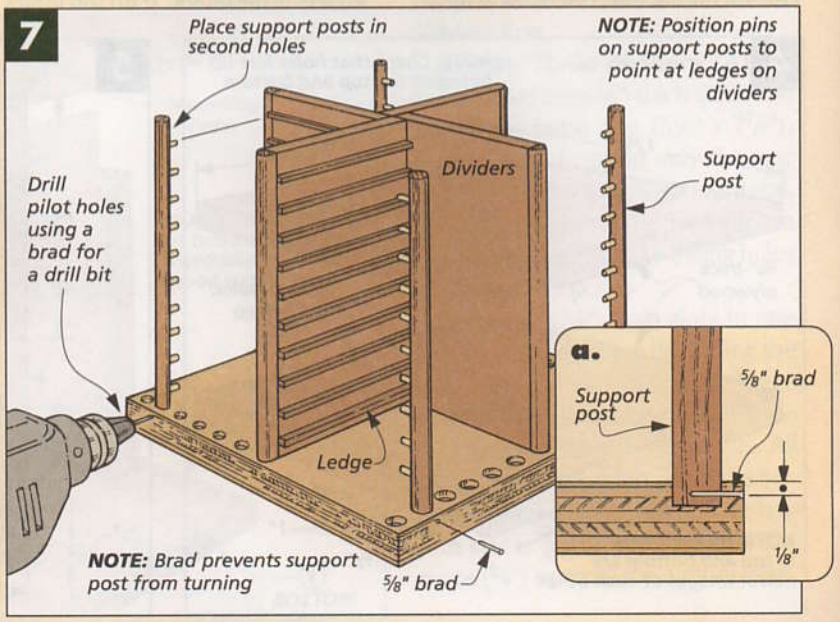

TOP MOLDING. To cover the exposed heads of the mounting screws in the case top and to conceal the plywood edges, I added several "layers" of built-up molding, see Fig. 8.

EDGE MOLDING. The first layer of molding added to the top of the case is ½"-thick **edge molding (H)**, see Fig. 9. It covers the plywood edges, and it also provides a framework around the rest of the molding.

This 1¼"-wide molding wraps around the case top. But before installing the molding, I routed two different profiles on the outer edges, see Fig. 9. First, there's a ¼" roundover on the bottom edge, see Fig. 9a. Next, I routed a ¼" cove on the top edge, see Fig. 9b. Finally, miter the pieces to fit on the case and glue them in place

FRAME MOLDING. With the edge molding installed, the **frame molding (I)** can be added next, see Fig. 10. This is a 1¾"-wide piece of molding with a rabbet cut on one edge. The rabbet conceals the joint line between the edge and frame molding. But getting the depth of this rabbet set requires a bit of work.

The goal here is to get the lip of the rabbet flush with the top edge of the edge molding, see detail in Fig. 10. To do this, I gradually raised the dado blade checking the fit often, see Fig. 10a. Once the rabbet fits flush with the edge molding, I softened the corner by routing a ¼" roundover, see Fig. 10b. Then miter the molding to fit and glue it in place, see Fig. 8.

INSET PANEL. With the frame molding installed, it creates an opening on top of the case. I cut a ¾"-thick plywood **inset panel (J)** with a ¼" rabbet cut on all four sides and glued it in the opening, see Figs. 11 and 11a.

INLAY MOLDING. This rabbet creates a groove for T-shaped **inlay molding (K)** that's added next, see detail in Fig. 12. To cut this molding safely, it's a good idea to start with an extra wide blank and rout a full roundover on one edge, see Fig. 12.

Next, set up a dado blade and cut a ⅝"-wide groove on both faces to create the T-shape, see Fig. 12a. Then cut the molding free, see Fig. 12b. Now miter the ends and glue the molding in place, refer to Fig. 8.

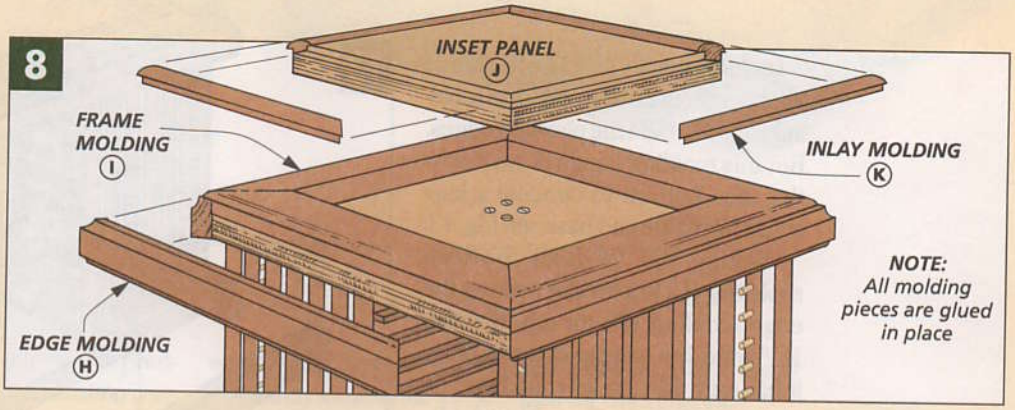

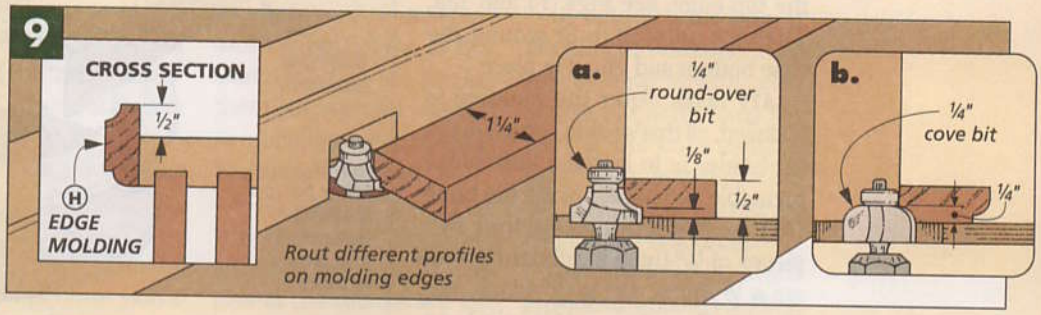

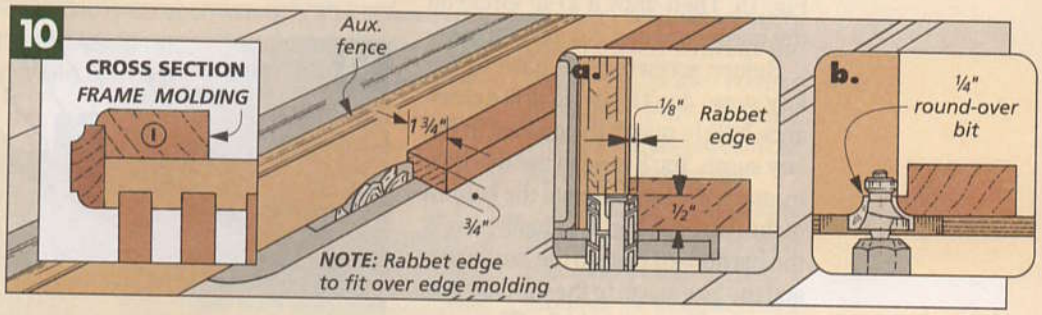

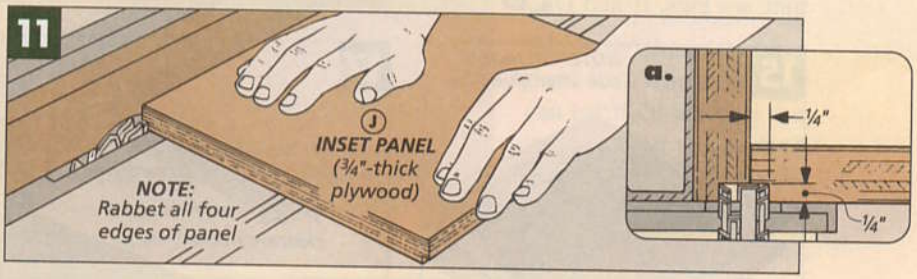

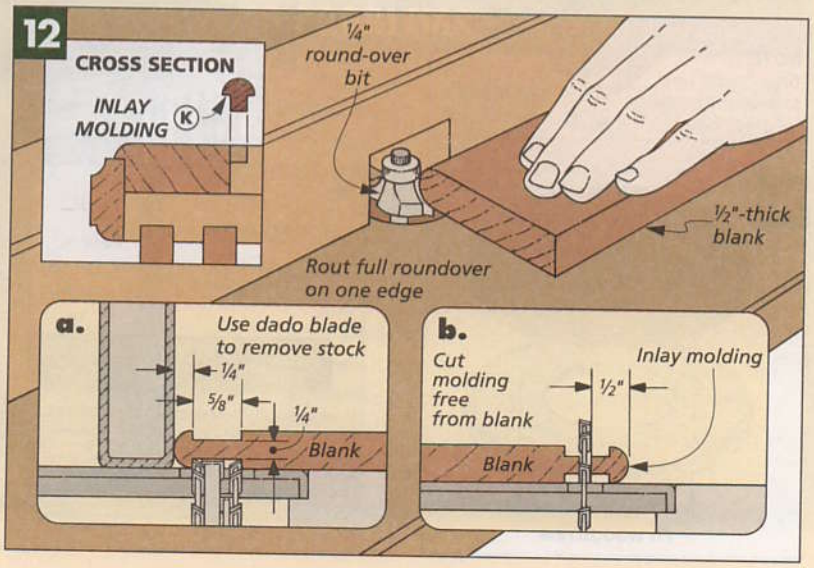

BOTTOM MOLDING. Just like the top of the CD case, the bottom also has molding added to hide the plywood edges. But this molding hangs down below the case bottom to conceal a lazy susan turntable and base see Fig. 13.

Making the ½"-thick **bottom molding (L)** is a lot like making the edge molding (H) on top. It's also 1¼"-wide, but instead of two profiles it has only the one ¼" roundover on the top edge, see Figs. 14 and 14a. Then it's mitered to fit around the case bottom and glued in place.

LAZY SUSAN. After the molding is installed, all that's left to complete the CD holder is to install a lazy susan turntable and base. I made the **base (M)** by first gluing together two pieces of ¼"-thick hardboard to create a ½"-thick, 12" x 12" blank, see Fig. 15. Then draw a 11¼" circle on the hardboard and cut out the base.

Before screwing the base to the lazy susan don't forget to drill a clearance hole to match the one cut in the lazy susan. You'll need to use this hole to attach the lazy susan to the bottom of the case, see Fig. 17. Finally, screw the hardboard base to the lazy susan and the lazy susan to the the case bottom, see Figs. 16 and 17a.

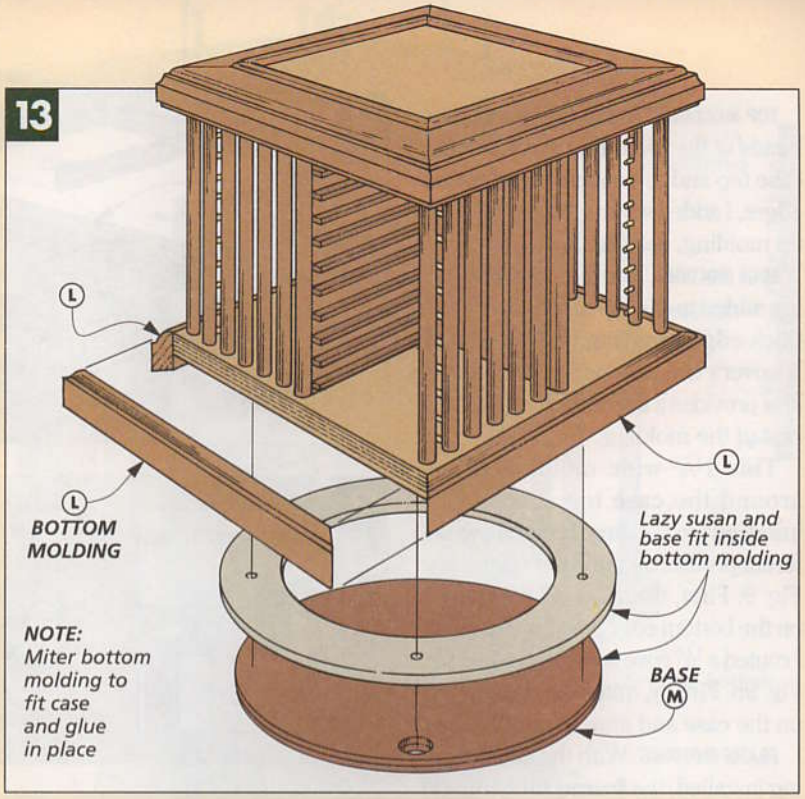

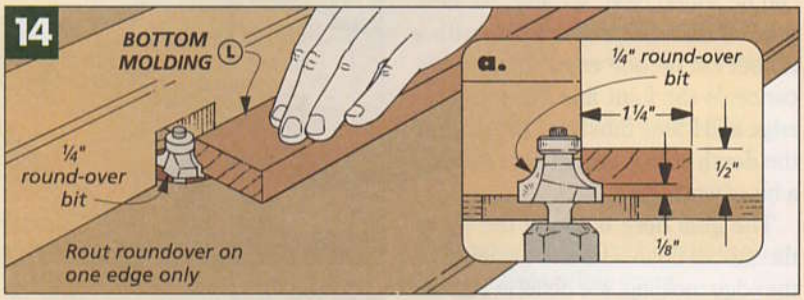

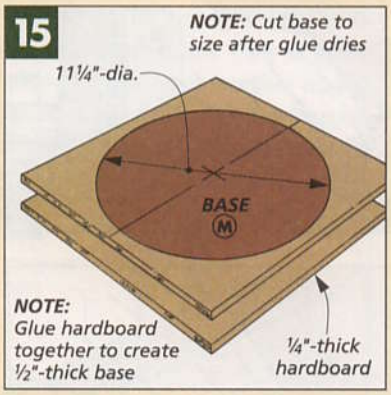

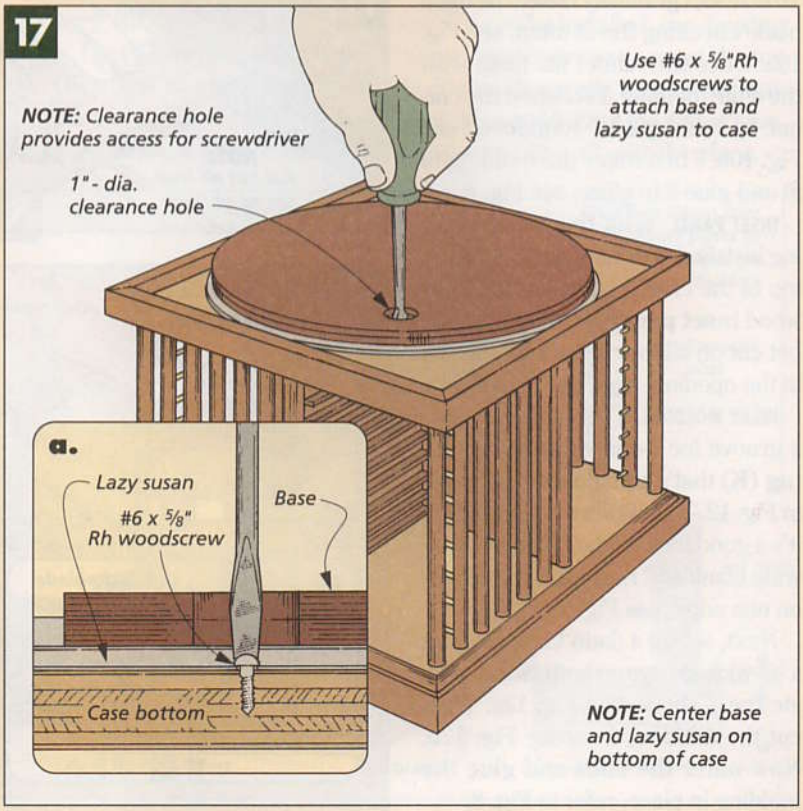

TALKING SHOP

Combination Core Plywood

While working on the modular wall cabinets, I noticed the plywood was constructed a little differently from the traditional plywood I was used to using.

Traditional hardwood plywood consists of several fir plys covered by a veneer layer, see Fig. 1. But this new plywood looked like it was made from two different core materials.

So I did some checking and found I was working with a relatively new product called combination core plywood. This type of plywood uses particleboard, instead of the traditional fir plys for the two outer core layers, see Fig. 2.

To find out more about this product, I talked with Bob Geimer at the USDA's Forest Products Lab in Madison, Wisconsin. Bob's a particleboard and veneer specialist, and he told me, "Like everyone else, plywood manufacturers are constantly looking for ways to improve their product and reduce costs at the same time. One solution for them has been the use of a combination core in their hardwood plywood."

Bob went on to explain why these core materials are used together. The fir plys in the middle are for strength and screw retention. And the outer crossbands of particleboard provide a smooth, void-free surface for the veneers.

In talking with Bob, it seems combination core has several advantages. Using particleboard for part of the core utilizes wood from less desirable sources. That saves money and limited resources.

Also, since particleboard provides a smooth void-free surface, thinner veneers can be used without the core irregularities coming through. Plus, thinner veneers will also stretch our hardwood resources.

That's the good news. But the bad news is thinner veneers can present a problem for woodworkers. With veneers getting as thin as 1/42"-thick, anything more than a light sanding can cut right through the veneer. And sometimes applying the finish is a problem, see the box below.

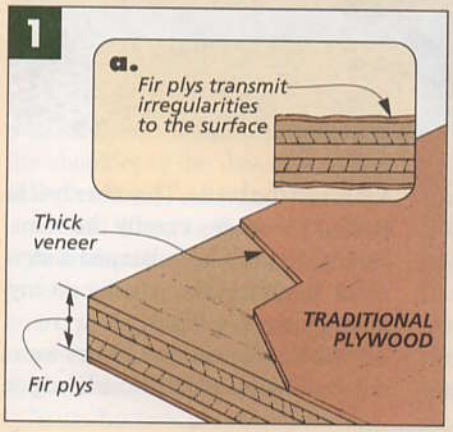

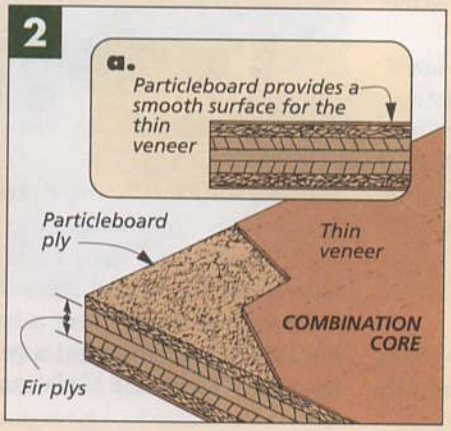

PLYWOOD FINISHING PROBLEMS

Thin veneer on plywood is a fact of life. And every once in awhile you may run into a finishing problem. Especially when using open grain woods (like red oak). The adhesive that's used to glue the veneer to the plywood core can seep through the pores to the surface of the panel.

This happened to me while building a pair of doors for a cabinet. But the problem wasn't apparent until I put stain on the panel. Then white streaks of adhesive were visible.

With nothing to lose, I tried sanding one area where the adhesive was the worst. But after about five strokes with the sanding block, I had cut through the thin veneer.

Now I check for adhesive on plywood the same way I check for glue on an assembly. I wet a rag with mineral spirits and wipe down the plywood. Then I can see whether the panel will be any good or not.

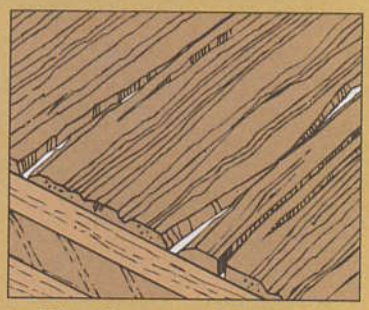

▲ *The adhesive in the pores of the wood looks like white streaks because it won't accept stain.*

PHOTO BOX

The lid on this box does more than just protect what's inside. It's also a photo frame. And it opens without using any hardware.

What's surprising about this box is how it opens. Everyone who picks it up starts by tugging on the lid, but there aren't any hinges. The lid slides open on dovetails that are completely hidden until the lid is opened, see drawing in margin.

There's another nice little feature to the lid of this photo box. Instead of just covering the box, the lid also acts as a frame that holds several small photos. And you can customize the grid design to hold the photos you want.

Before I get much farther, I should mention that the wood here is not one we use often — it's mahogany. For a small project like this box, mahogany is a perfect choice. It machines easily, and like cherry, it darkens naturally, see the box on page 27.

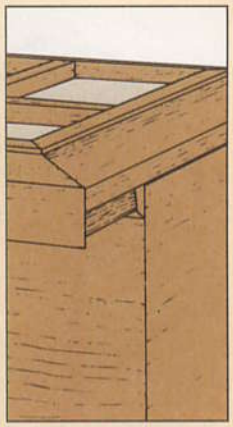

▲ *The lid on this photo box opens and closes with sliding dovetails. But these dovetails are completely hidden until the lid is pulled open.*

BOX

This box starts out like many others I've built. It has a **front (A), back (B),** and two **sides (C)**, see drawing below. These ½"-thick pieces start out identical, and their ends are mitered to create a small, square box.

Though the joinery here is basic, it's still important to get a good, square fit. Tilting the blade exactly 45° is half the battle. The other half is cutting the pieces exactly the same length. To do this, I clamped a stop block to an auxiliary fence on my miter gauge, see Fig. 1.

RABBETS. After the box pieces were mitered, I rabbeted the inside edges

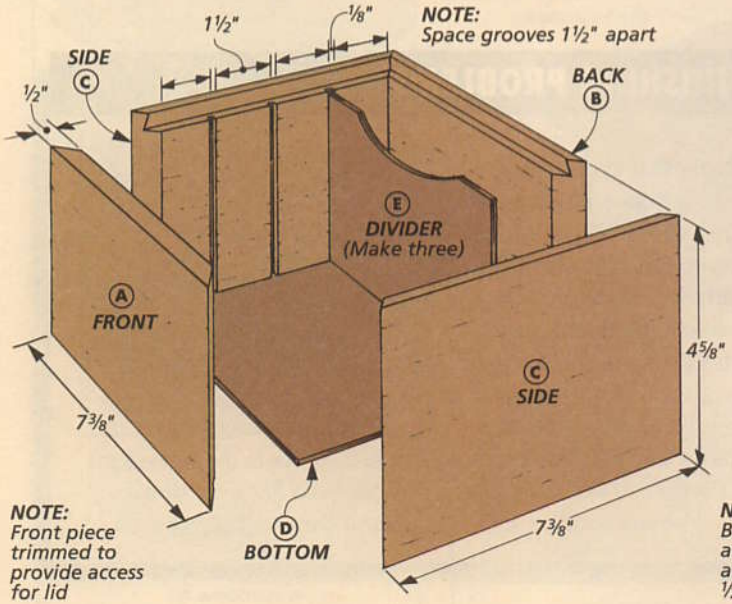

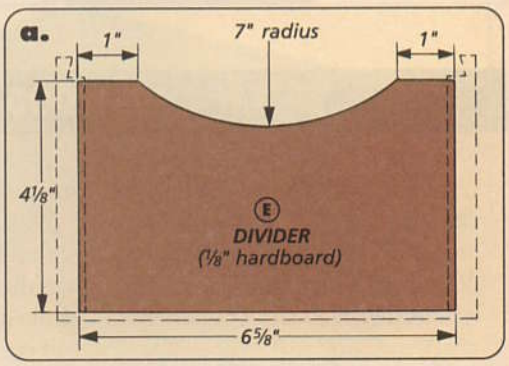

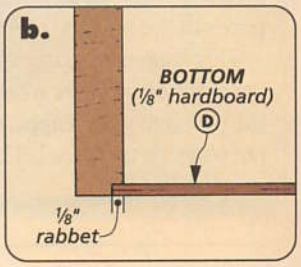

of all the pieces (A, B, C) to hold a ⅛" hardboard bottom, see Fig. 2.

GROOVES. While I was at the table saw, I also cut grooves for three ⅛" hardboard dividers that are added later, see Fig. 3 and the drawing on page 24. Note: These ⅛"-deep grooves are cut on just the side pieces (C).

SLIDING DOVETAIL. After the grooves are cut, it's time to concentrate on the dovetails. Routing these dovetails is easy. A router table and a ½" dovetail bit are all you need, see Fig. 4.

But I wanted to avoid chipout, so I didn't try to rout the dovetail in one pass. Instead I took a shallow cut first, see Fig. 4a. Then I reset the fence to make a ¼"-deep cut, see Fig. 4b.

Note: When it comes time to rout the mating half of the dovetails, you'll be working with this same setup, so you can leave it as is for now.

Once the dovetails are routed, set the back and side pieces aside for a moment. The front piece (A) needs to be trimmed to create an opening that the lid will slide into. To do this, simply cut away the "dovetail" so the top edge of the front ends up flush with the shoulder of the dovetails on the side pieces (C), see Figs. 5 and 5a.

BOTTOM. When that's done, I turned my attention to the **bottom (D)**. But to determine the size of this ⅛" hardboard panel, the box has to be dry assembled. Then it can be cut to fit in the rabbets cut earlier, see Fig. 6.

Now the box can be glued up, (including the bottom to help keep things square), see Fig. 6.

DIVIDERS. To complete the box, all that's left is to cut three **dividers (E)** from ⅛"-thick hardboard to fit in the grooves cut in the box sides, see drawing on page 24. The only thing critical here is to make sure the dividers end up slightly below the shoulder of the dovetail. Otherwise, the lid will catch on them and won't slide closed.

Finally, to make it easier to remove the photographs, I laid out and cut an arc on the top edges of the dividers before setting them in place.

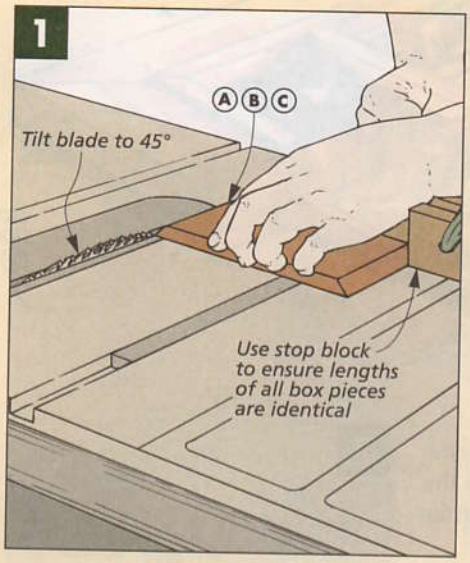

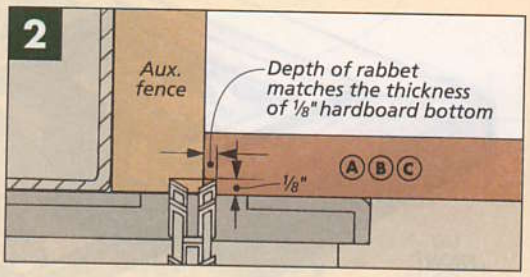

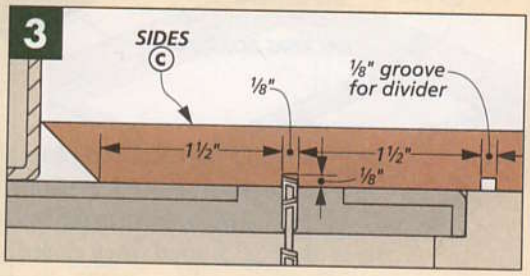

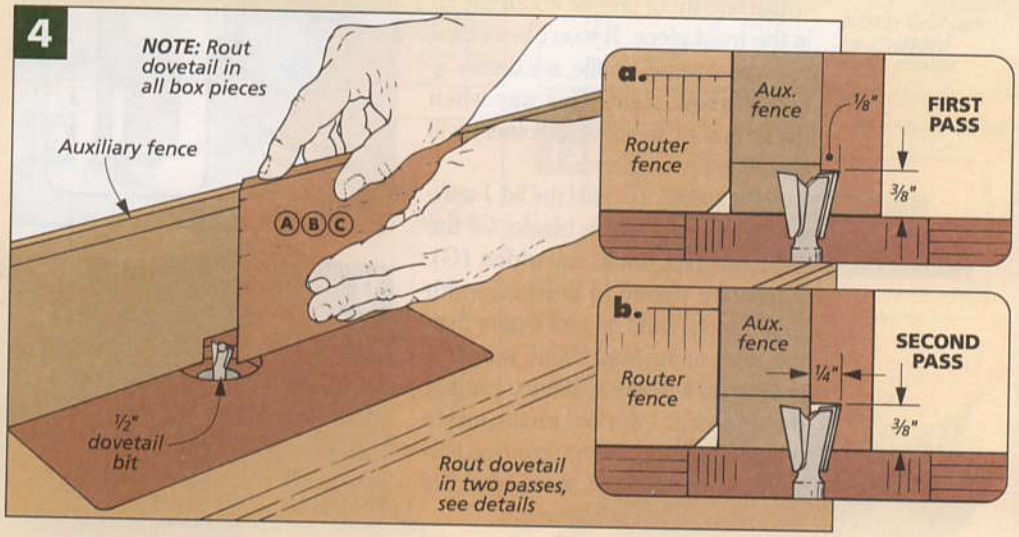

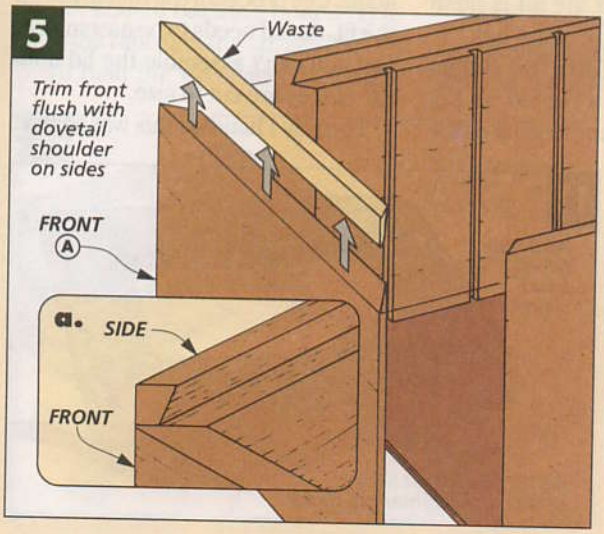

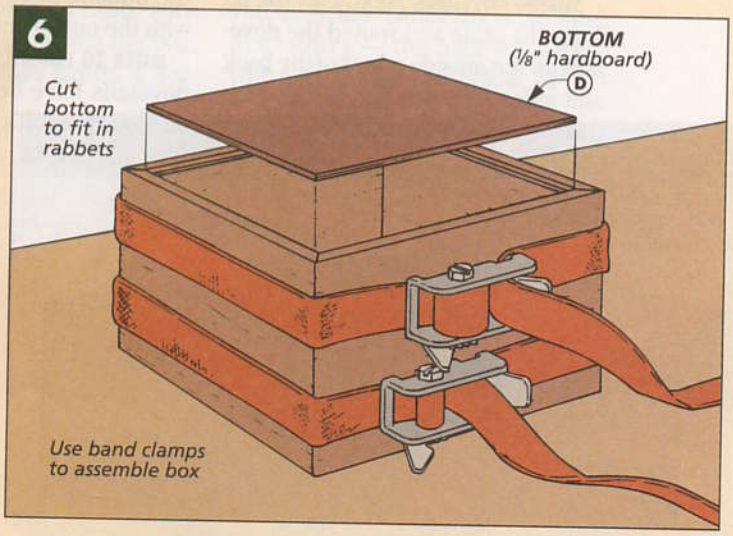

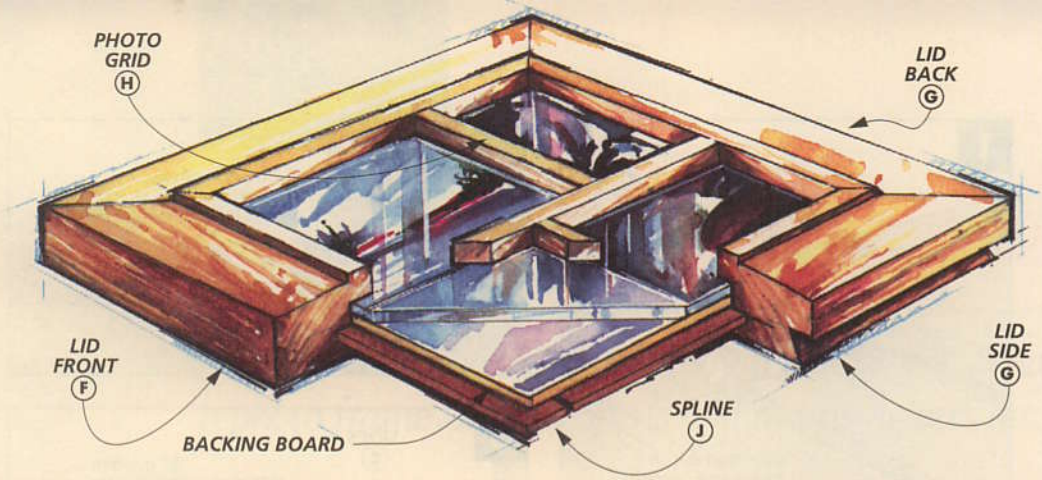

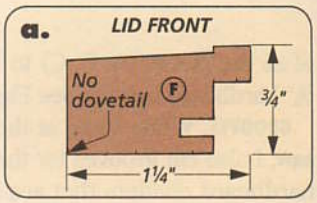

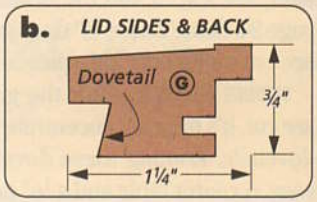

Now that the box is complete, it's time to begin on the lid. It slides in the dovetail grooves cut in the box and fits flush all around when closed.

But one thing unique about the lid is the front piece. It won't be routed with the dovetail profile, see details 'a' and 'b' above right. This way when the lid is shut, the dovetail joinery will be hidden from view.

FRAME BLANKS. To build the lid, I started with four 3/4"-thick blanks for the **lid front (F), back,** and **sides (G).** These are ripped to finished width (1 1/4") and should be a bit longer than the sides of the box. (Mine were 9".)

GROOVES & RABBETS. Before routing the dovetails, I worked on the inside edges of the lid. Here, grooves and rabbets will hold the photos and the glass, see drawing above.

To be safe, I wanted to keep the blanks as stable as possible when making these cuts. So first, I cut the 1/2"-deep grooves along the inside edges, see Fig. 7. Then I laid the piece on its bottom face and cut a 1/2"-deep (tall), 1/4"-wide rabbet, see Fig. 8.

SLIDING DOVETAILS. Next, I set the lid front (F) aside and routed the dovetails on the outside edges of the back and sides (G), see Fig. 9. But with these dovetails, you want to sneak up on the final fit, see Figs. 9a and b. You'll know the cut is correct when the outside edge of the lid is flush with the outside edge of the box.

MITER TO LENGTH. After the sliding dovetails have been routed on the back and sides, it's time to miter all the pieces to final length so the lid will fit inside the box. The awkward thing about this procedure is that to check the fit, the lid needs to be assembled. But you can't assemble the lid until the pieces are cut to size.

The way I handled this was to start

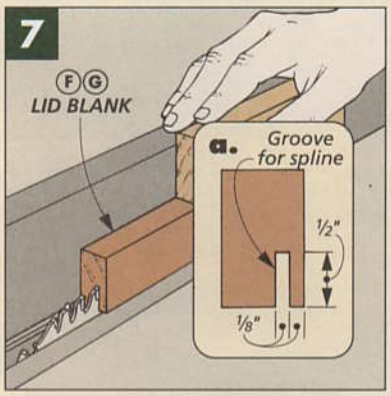

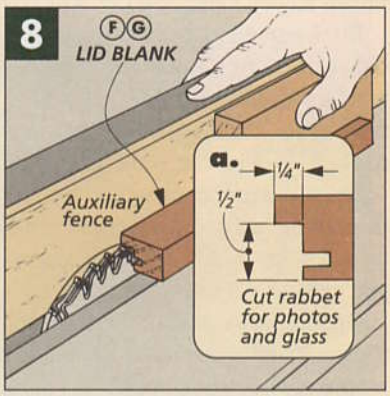

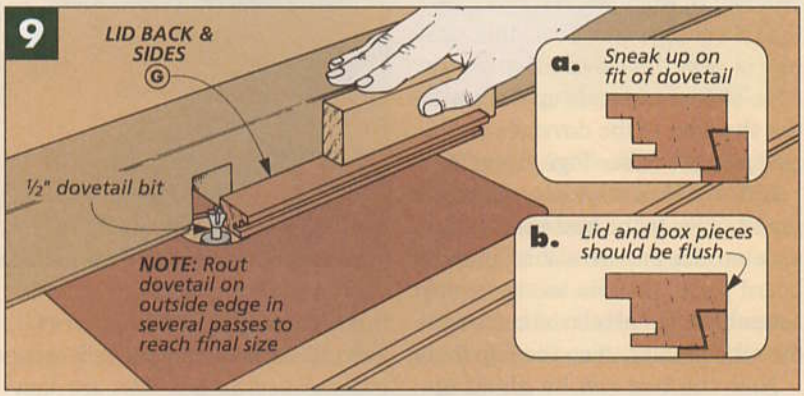

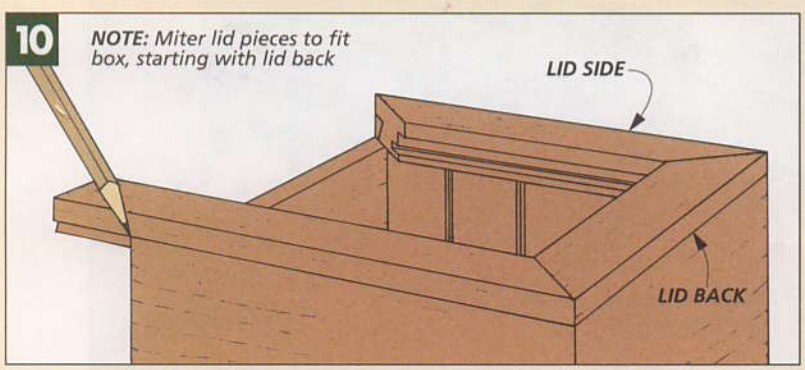

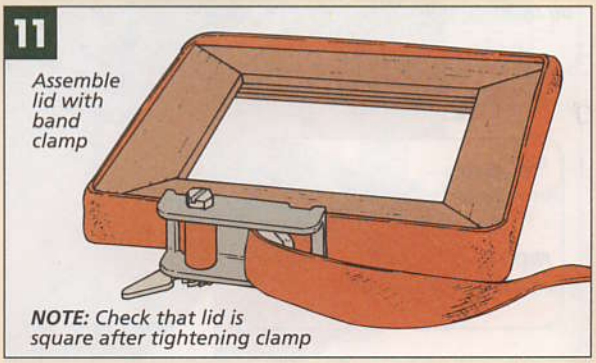

with the back piece, sneaking up on the mitered length until it slid into the box, see Fig. 10. Then I worked on the other pieces (the sides and the front) trimming them until they fit.

What you're shooting for is a lid that's flush with the outside edges of the box. Whether it slides easily or not doesn't really matter at this point. (It can be sanded later, if needed.)

ASSEMBLY. When you're satisfied with the fit of the lid pieces, you can glue and then clamp them together with a band clamp, see Fig. 11.

BEVEL. After the glue is dry, I cut a bevel on the top face, leaving a decorative 1/16"-high shoulder, see Figs. 12 and 12a. (Be sure to test the setup on a scrap piece before cutting the lid.)

After the bevel is cut, the tiny shoulder that was created needs to be squared up. All this requires is a few strokes with a small sanding block.

PHOTO GRID. At this point, the lid looks like a frame that will hold a single photo. But I decided to break up the opening into smaller spaces. To do this, I added a grid, see Fig. 13.

This grid is simply 1/4" x 1/4" strips of wood glued into the lid to create four openings. The joinery is very simple. Just cut the **grid (H)** pieces to fit tight and glue them in place.

Note: You can change the size and configuration of the openings depending on the photos you want to use.

When the photo grid is in place, you can add the glass, photos, and a 1/8" hardboard **backing board (I)** to fit in the rabbet in the lid, see Fig. 14.

To hold the glass and backing, I cut 1/8" hardboard **splines (J)** to fit in the grooves in the lid, see Fig. 15.

FINISH. Next, check to make sure the lid slides smoothly into the box, sanding the dovetails lightly, if necessary, see Fig. 16. And finally, wipe on a couple coats of an oil finish. If you think the mahogany is too light, don't worry — the color will darken with age, see the box below.

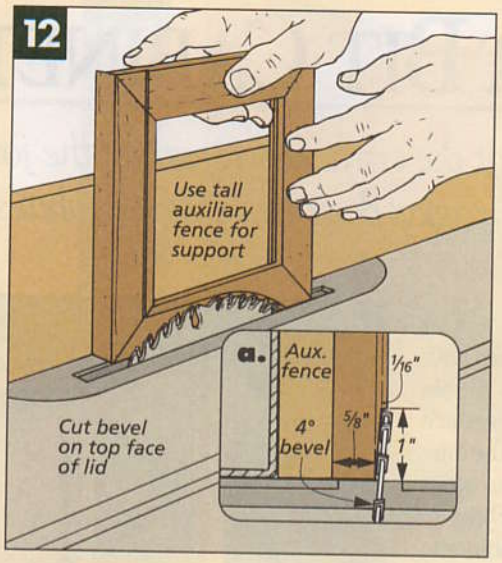

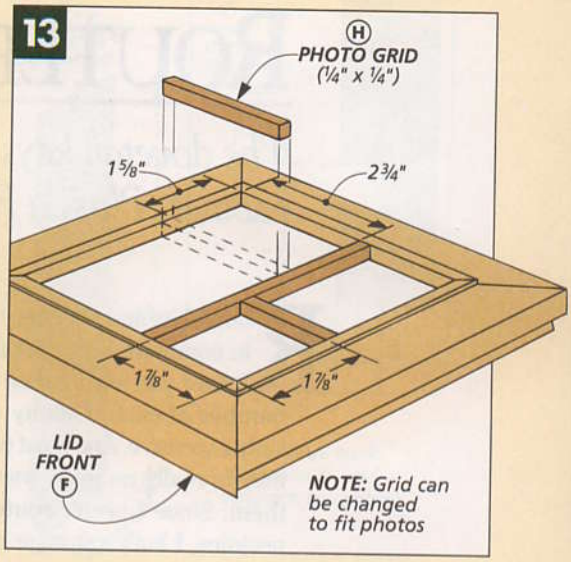

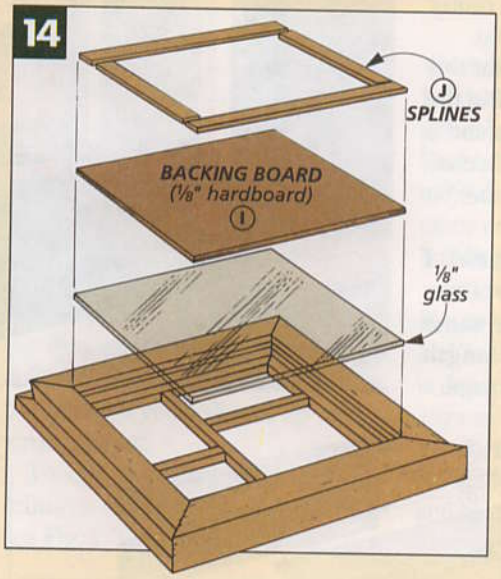

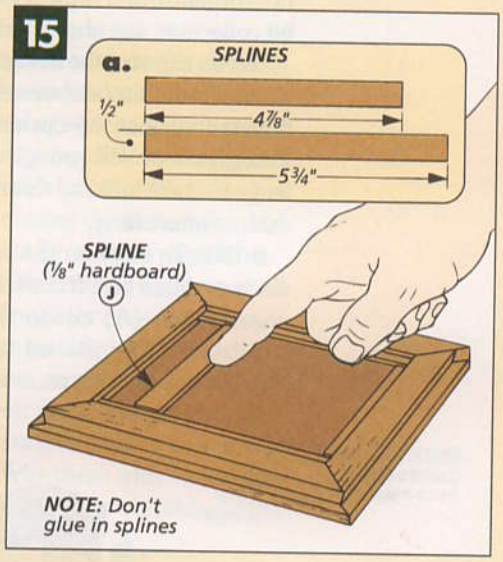

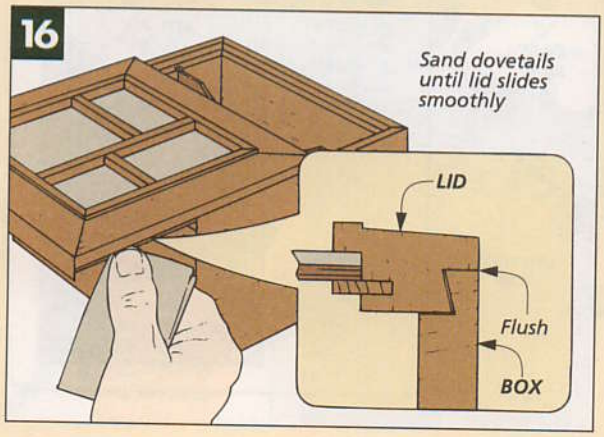

MAHOGANY

When you start working with mahogany, it's a light, tan color. But it won't stay that way long. It will turn to a deep reddish-brown. This board was left on a window sill for a couple weeks. The left half was covered. The right half, being exposed to the air and sun, darkened significantly.

ROUTER BIT CABINET

The dovetail keys at the corners strengthen the joints to make a stronger cabinet. Plus, a Plexiglas door lets you see what's inside.

Router bits and neckties have a lot in common. It doesn't take long before you accumulate a sizable number of each. Quality ones are fairly expensive. And most of the time there's really no good way to store them. Since I prefer router bits to neckties, I built a storage cabinet to help organize and protect my router bit collection, see photo at right.

As you can see, the design for this cabinet is nothing elaborate. But the dovetail keys at the corners and a Plexiglas door add enough of a challenge to make building this router bit cabinet interesting.

MITERS. To start on the cabinet, I made a square box. It consists of four **case sides (A)** cut to the same width (4") and mitered to length (13½"), see drawing on next page.

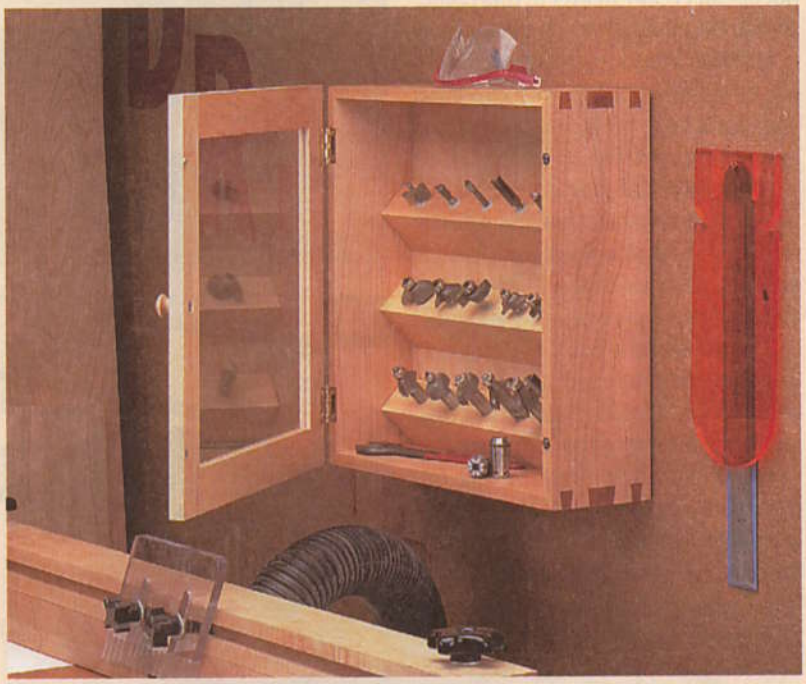

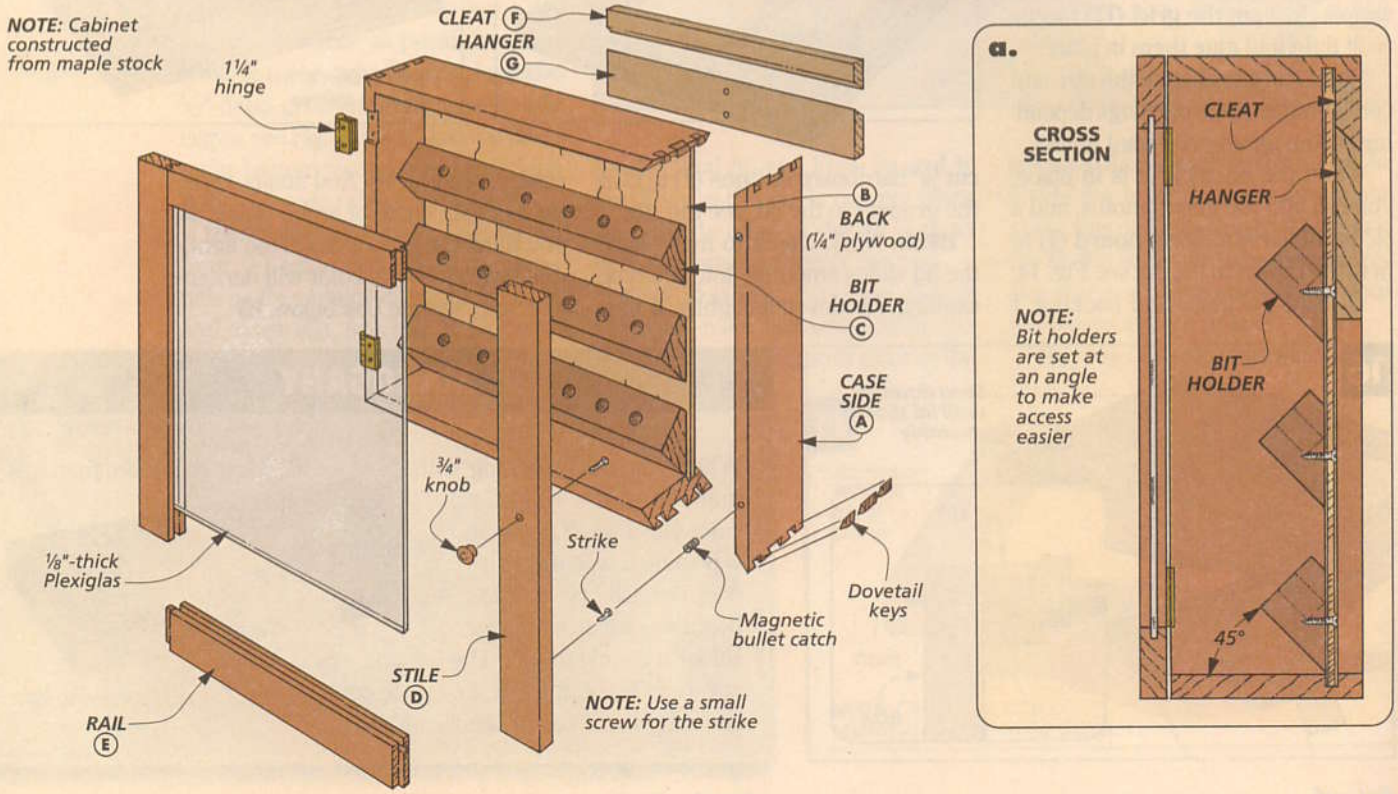

To end up with a tight miter joint, the pieces have to be cut to the same length. After cutting an angle on one end of all the pieces, I install a stop block on the auxiliary fence of my miter gauge and cut the pieces to final length. A stop block prevents the pieces from moving away from the blade during the cut.

GROOVES. After cutting the miters, the next step is to cut a ¼"-deep groove at the back of each piece for a ¼"-thick plywood back, see detail 'a'. What's a little unusual is the groove is located ½" in from the back edge. This provides room for the cleat mounted on the back.

I couldn't use my dado blade to cut this groove since it had to be less than ¼" wide (the thickness of my plywood was less than ¼"). So I cut the groove by making a couple of passes with a regular combination blade to sneak up on the width. This way, it's easy to check the fit between passes.

BACK. With the grooves complete, work can begin on the ¼" plywood **back (B)**. The important thing is getting the back sized to allow the miters to fit together tightly. To do that, it's a good idea to dry assemble the side pieces and back. Then if there's any gap at the corners, the back can be trimmed a little smaller.

ASSEMBLY. When you're satisfied with the fit, glue and clamp the case sides and back together. (Gluing in the plywood back is a good way to add strength to the case.)

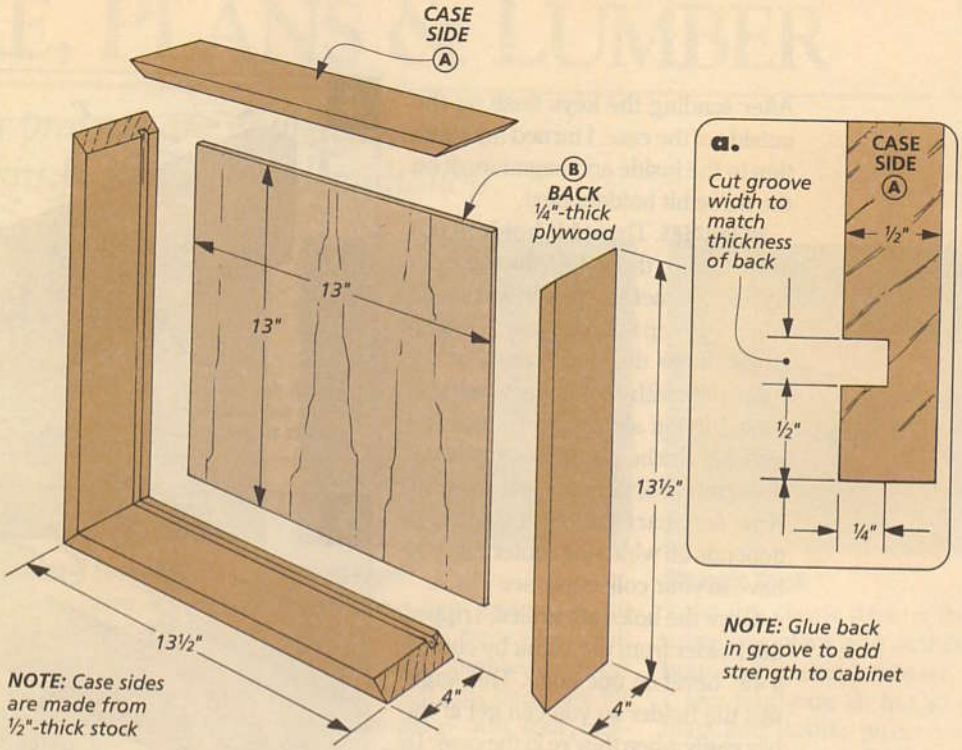

DOVETAIL KEYS. Normally before I glue a box together with mitered corners, I add splines for strength. I used splines this time too. But instead of putting them on the inside of the joint, I added them across the outside corners, see drawing on previous page. These splines have a dovetail shape, but they aren't just decorative. The splines create more surface area for the glue, so you will end up with a stronger joint.

To cut slots for these splines requires using an easy-to-build jig, see Fig. 1. This jig automatically tips the router at an angle so the slots can be cut perpendicular to the joint. A guide bushing attached to the router base follows a template on the jig, and a ½" dovetail bit cuts the slots. For more on cutting the slots, keys, and building the jig, refer to page 32.

I routed three slots 7/16" deep at all the corners of the box, see Figs. 2 and 3a. The spacing between the slots is decorative, so you can space them anyway you want. Then make your keys to fit snug in these slots, see Fig. 3. Finally, trim them with a hand saw and sand them flush with sides of the box, see Fig 3.

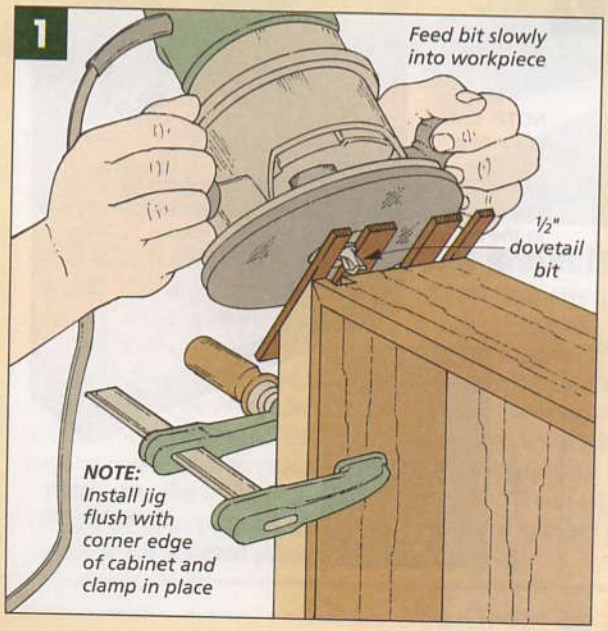

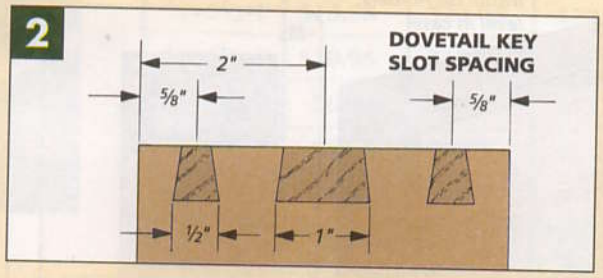

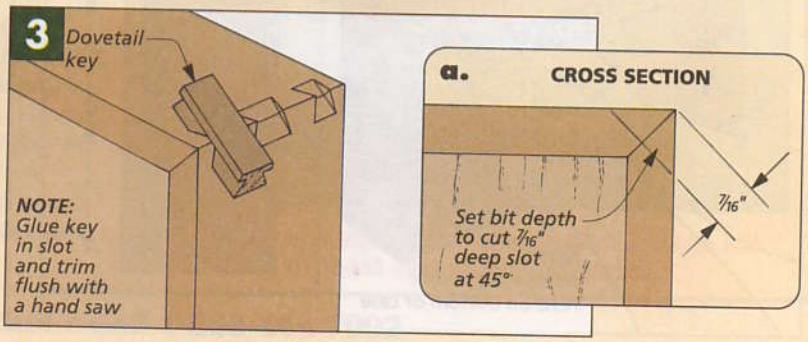

After sanding the keys flush on the outside of the case, I turned my attention to the inside and began work on the three bit holders next.

BIT HOLDERS. These **bit holders (C)** are cut from three 1½"-thick blanks with ½" diameter holes drilled in one edge. To keep things simple, I drilled all the holes the same size. For my router bits with a ¼"-diameter shank, I used nylon sleeves to reduce the size. See the box at the bottom of the next page. For sources, see page 35. How far apart you drill the holes depends on what size router bits you have in your collection, see Fig. 4.

Once the holes are drilled, I ripped the holder from the blank by cutting a 45° bevel on one edge. This angle tips the holder so you can get at the bits easily when they're in the case. To cut this bevel safely, I started with an extra wide blank (4"). It keeps your hands a safe distance away from the blade, see Figs. 4 and 5.

INSTALLATION. After the three bit holders are cut free, they can be screwed to the cabinet back, see Figs. 6 and 6a. But you want to be careful where you drill the mounting holes. They need to be positioned so they don't go through the holes for the router bit shanks, see Figs. 7 and 7a.

DOOR. With the bit holders installed in the case, a door can be built next to fit on the front. I decided to use a full overlay door for the cabinet. This means the door has to be sized to match the overall dimensions of the case. The door is constructed with a pair of **stiles (D)** and **rails (E)** with a ⅛"-thick Plexiglas panel sandwiched in the middle, see Fig. 8.

To hold the Plexiglas panel in the door, a ⅛"-wide x ¼"-deep groove is centered on the edge of all the door pieces, see Figs. 9 and 9a. Besides holding the Plexiglas panel, this groove also holds a stub tenon cut on the ends of the rails.

Before cutting the stub tenons, I switched to a dado blade. Then I removed stock from both sides of the rail until the tenon ended up centered on the thickness, see Fig. 10.

All that's left to building the door is cutting the Plexiglas panel to size. A quick way to find the correct size is to dry assemble the stiles and rails

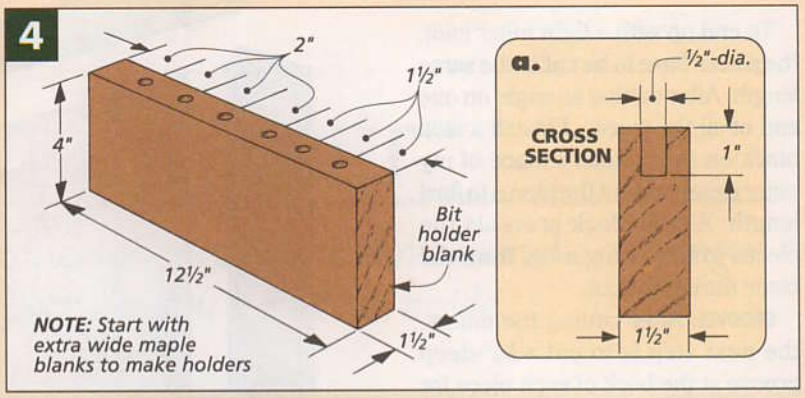

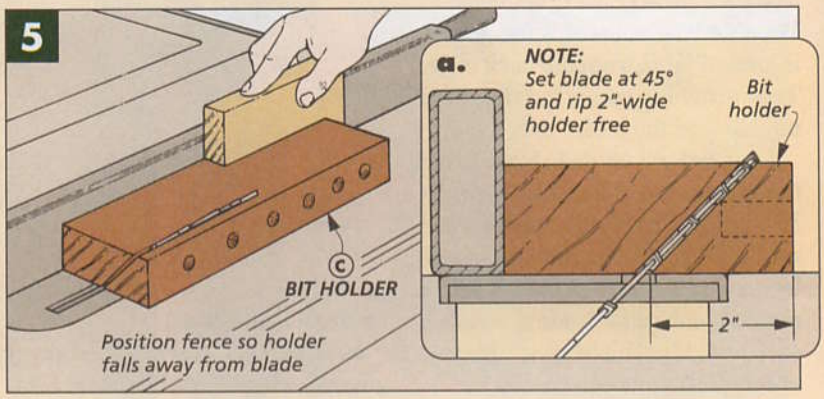

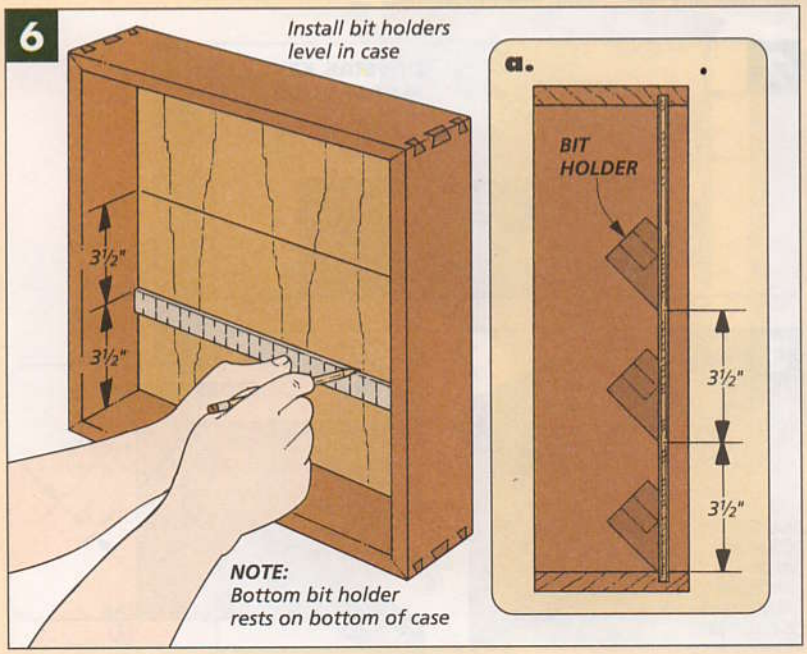

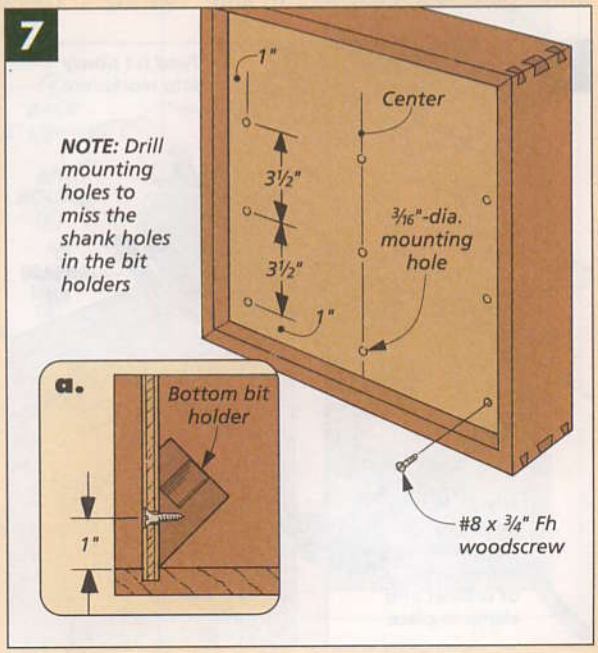

and measure the opening. Now add in the lengths of the tenons (½") and subtract ⅛" for clearance. Then cut the panel to size. In my case the panel ended up 10⅞" x 10⅞". Finally, glue the stiles and rails together with the Plexiglas panel in place.

HINGES. With the door built, it's ready to hang on the case. To do this, I mortised the hinges into the case and screwed them to the door, see Figs. 11 and 11a.

KNOB & CATCHES. To keep the door closed, I installed a pair of magnetic catches, see Fig. 11b. The instructions that came with the catches recommended using a 5/16" drill bit. But the fit was a little too tight. So instead, I drilled the holes a bit oversize (11/32"). Then to make sure the catches would stay put, I coated the inside of the holes with a little epoxy before installing them in the case.

With the catches installed, the door strikes came next. But I couldn't use the ones that came with my catches. The small metal washers were too thick for the size of my door. (It made the door look like it was hanging part way open.) To solve this problem, I simply used a short steel screw (#6 x ½") for the strike.

Finally, to complete the door, a birch knob is installed on the stile, see Figs. 11 and 11c. The knob is centered on the height of the door and fastened to the stile with a screw.

CLEAT. Added to the back of the case is a **cleat (F)** and a **hanger (G)**. They make it easy to hang the cabinet on the wall and to remove it if you want to take it to a job site.

Both the cleat and hanger are made from ½"-thick stock with a 30° bevel cut on one edge, see Fig. 12. The cleat is cut to size and simply glued to the back of the case. Then mount the hanger level on the wall with a couple long woodscrews. To hold the case securely, just make sure these screws hit a wall stud. W

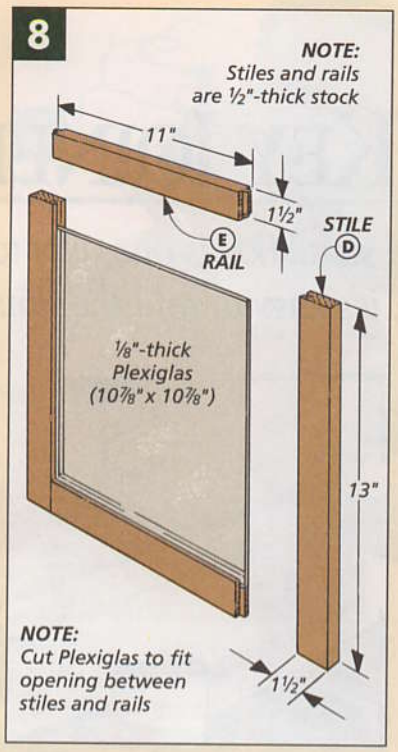

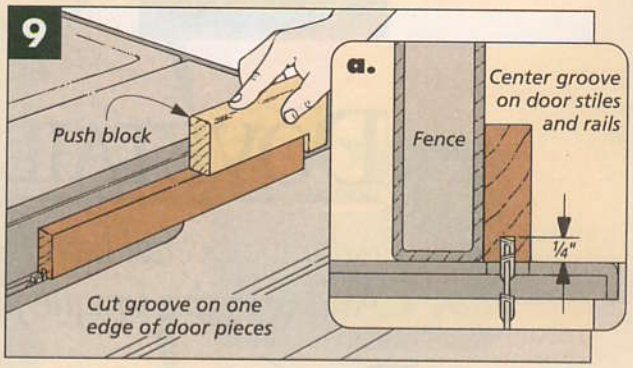

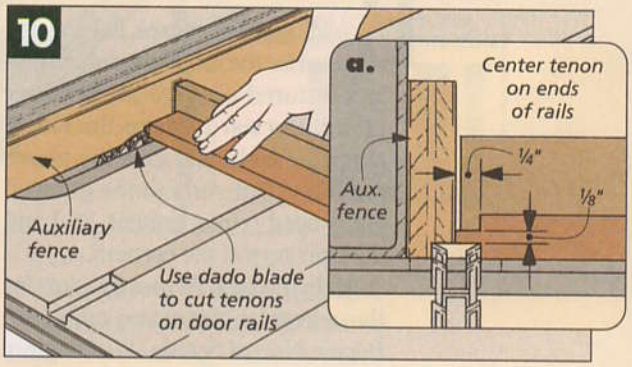

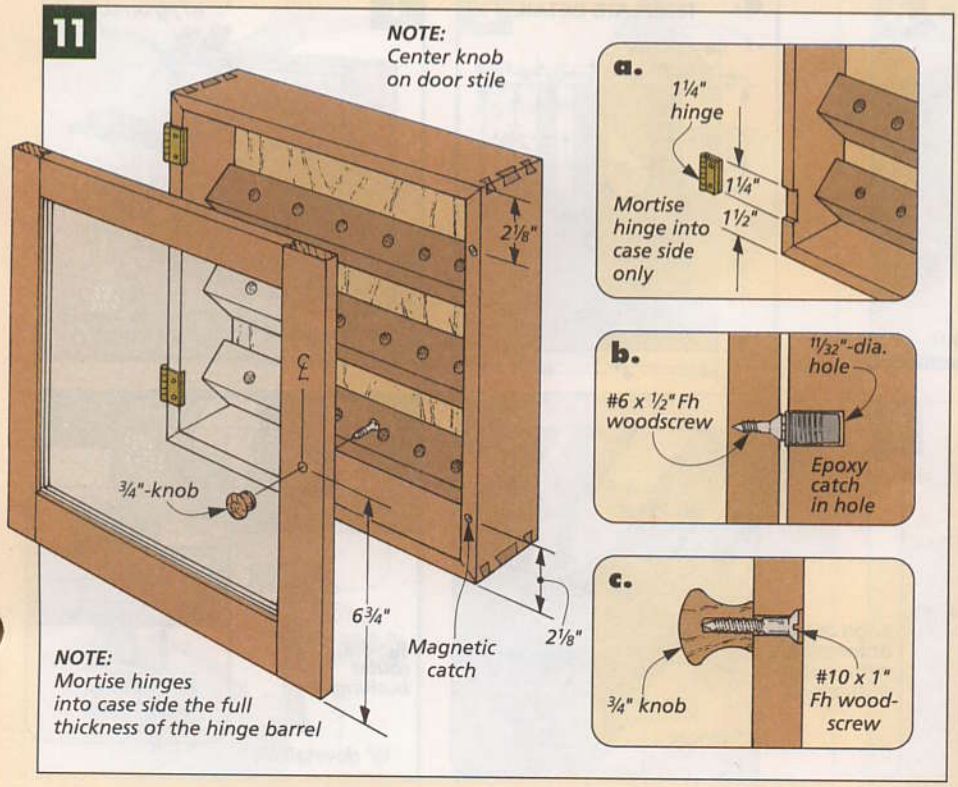

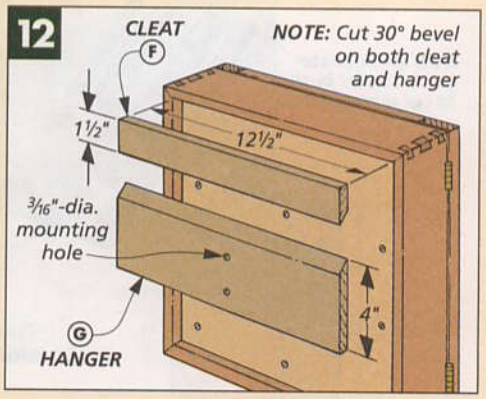

NYLON SLEEVES

This cabinet can also store your ¼"-shank bits by simply adding a ½"-dia. nylon sleeve to any of the holes.

DOVETAIL KEY JOINERY

Adding dovetail keys to a small box is one way to strengthen the corners. And with this unique jig, it's easy to rout the slots for these keys.

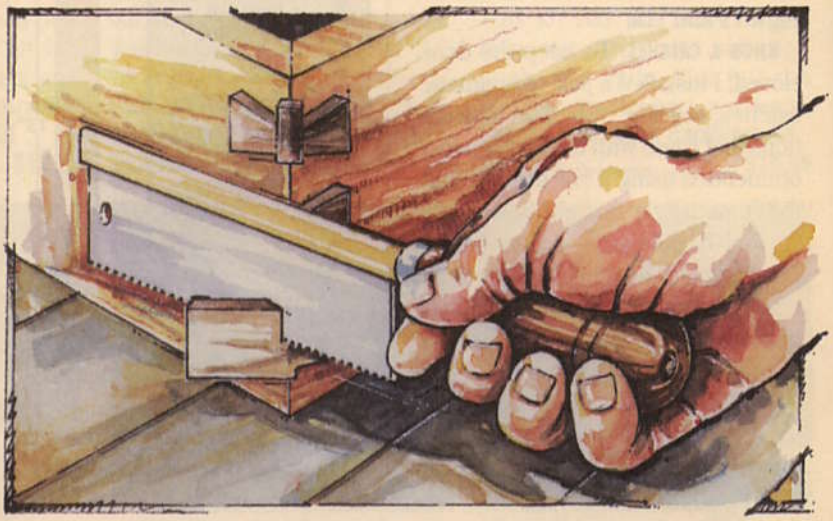

Building simple boxes, like the one used for the router bit storage project featured on page 28, is rather straightforward. Make the sides, miter the ends, and glue the pieces together. But sometimes mitered joints need reinforcement. So I add dovetail keys at the corners.

JIG. In the past, I'd rout the slots for these keys on the router table. But Bernie Noe of Seattle, Washington, sent in an idea that uses a hand-held router. We took that idea and designed a jig that clamps to the side of a box, see Fig. 1.

This jig consists of just two parts, see drawing below. There's a hardboard template on top to support and guide the router. And a support block underneath to hold the template at the proper angle for routing the slots.

TEMPLATE. The template used for this jig is a ¼"-thick piece of hardboard with slots cut in one end. These slots are for the guide bushing on the router. About the only design requirement when making the template is to make sure the slots are cut wide

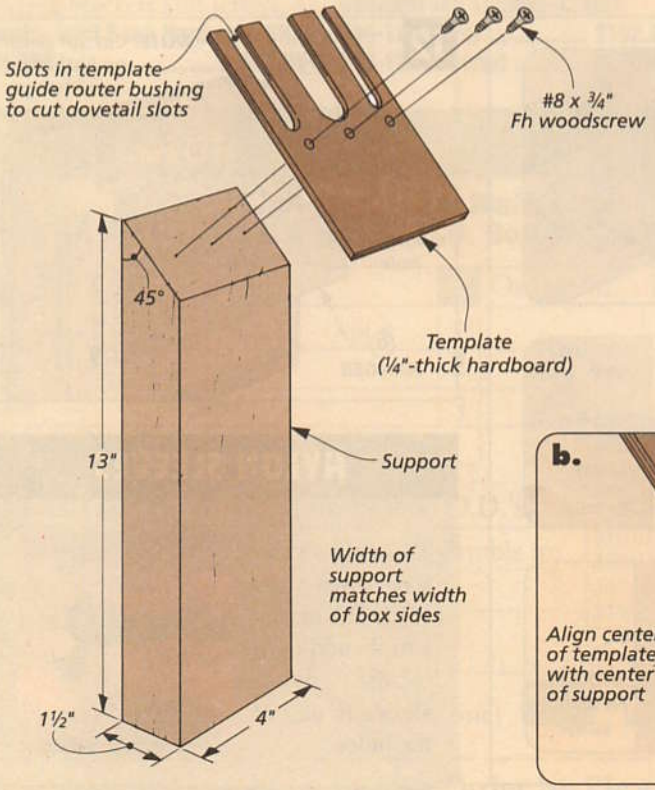

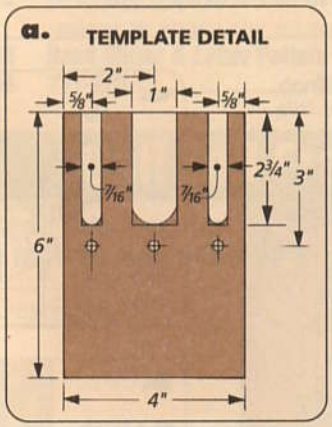

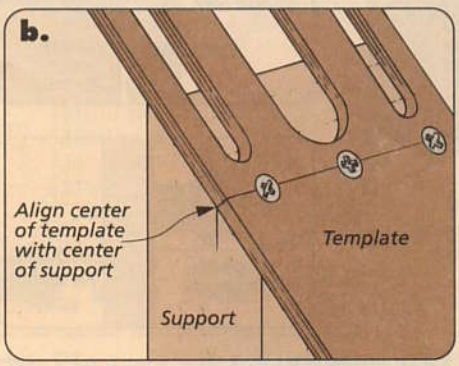

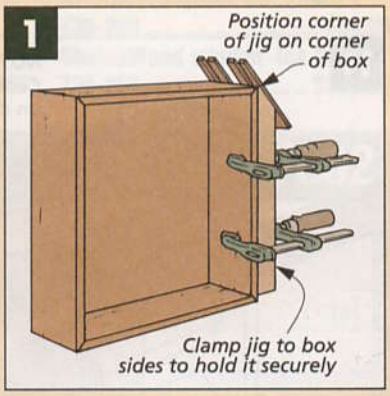

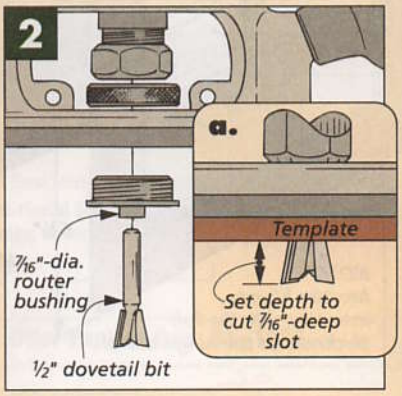

enough to fit the outside diameter of the guide bushing you plan on using.

For the router bit case, I cut three slots and made the one in the middle wider, see detail 'a'. Simply "stop" the slot by drilling a hole at one end and remove the waste in the middle.

SUPPORT. Glued and screwed to the template is a 1½"-thick support, see drawing and detail 'b'. A 45° angle cut on one end determines the angle for the template. And before driving in the screws, I positioned the center of the template over the centerline of the support block.

USING THE JIG. With the jig assembled, all you have to do is clamp it to one of the corners of the box, see Fig. 1. Then adjust the bit depth as needed, see Figs. 2a and 3a. In my case, the bit was extended below the template on the jig to create a 7/16"-deep slot, see Fig. 2a. The depth can vary, but if it's too deep, you'll rout through the inside of the box.

To rout the dovetail slots, the guide bushing follows the slots in the template, see Figs. 3 and 3b. Note: Don't lift up the router, otherwise you'll damage the template.

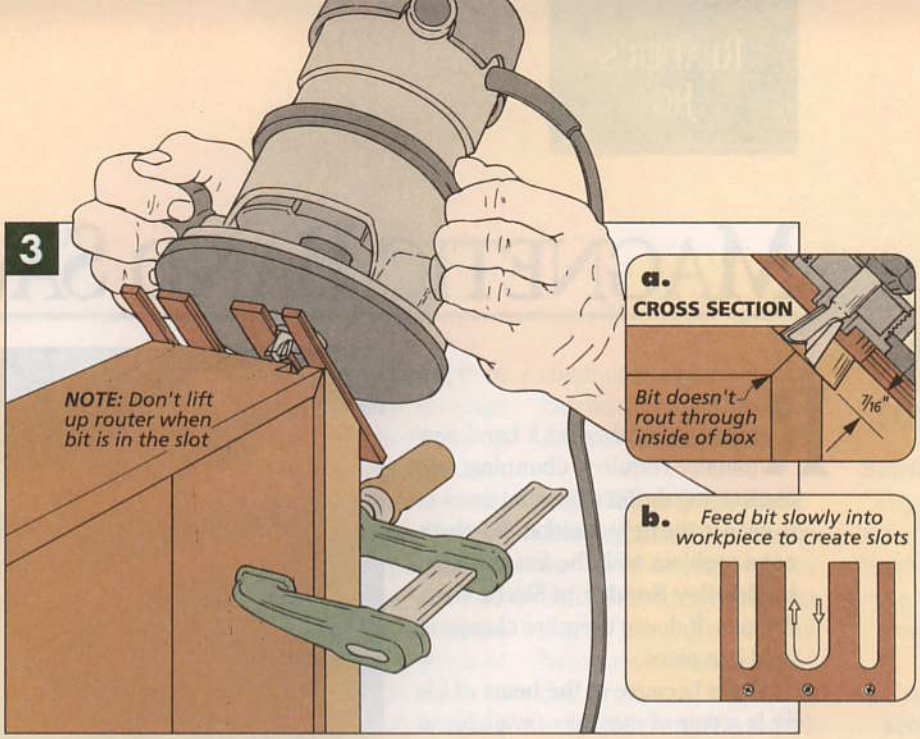

KEYS. Once the slots are cut, keys can be made to fill them. I started with a thick blank and adjusted the height of the bit to equal the depth of the slots, see Fig. 4. Note: Use a ¾"-thick blank for the small keys and 1¼"-thick piece for the large one.

Then sneak up on the thickness of the key for a snug fit. To save stock, I routed keys on both edges of the blank. It's a good idea to check the fit of all the keys in the slots, see Fig. 5.

When the keys fit, they can be ripped free, see Fig. 6. Don't worry about cutting them to an exact height. In fact, a small "cap" left on top makes it easier to handle the keys. Then glue the keys into the slots, see Fig. 7.

Once the glue dries, the keys need a little trimming. I used a small back saw to remove most of the waste, see Fig. 8. Finally, sand the keys flush with the side of the box, see Fig. 9.

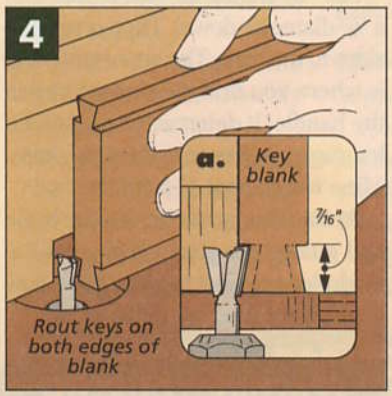

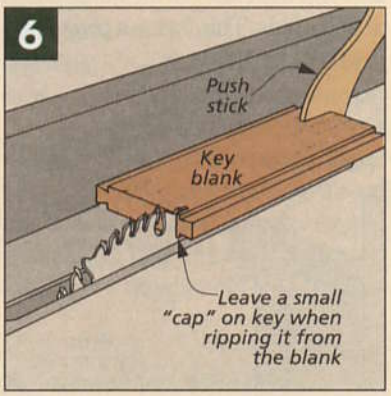

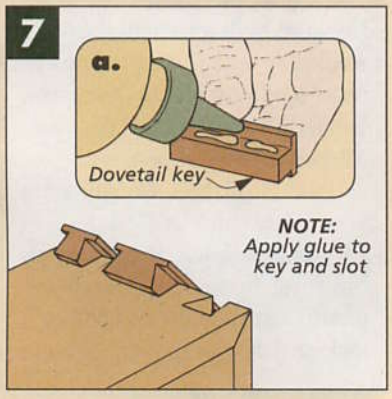

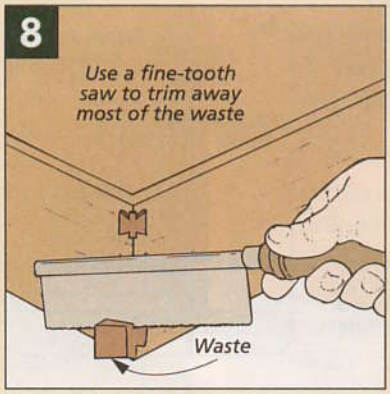

MAGNETIC BAND SAW FENCE

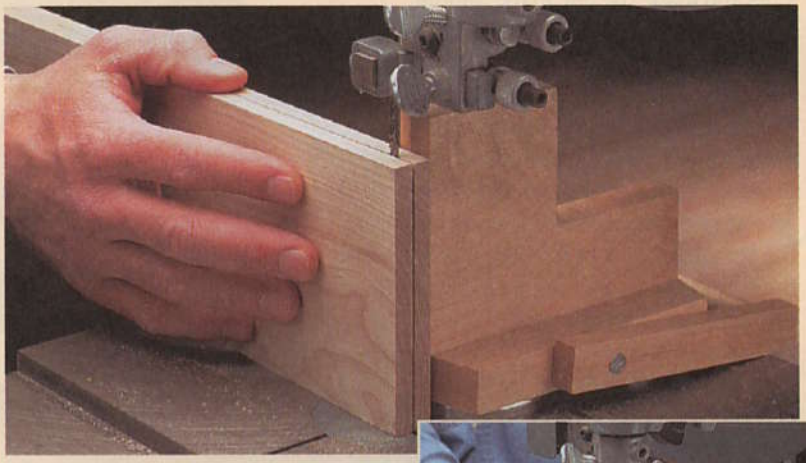

Resawing lumber on a band saw usually requires clamping and unclamping the fence several times to to get it in the right position. But that's not a problem with the fence sent in by **Bradley Snyder**, of Sierra Vista, Arizona. It doesn't require clamps to hold it in place.

That's because at the heart of his jig is a pair of magnets (available at most hardware stores), see page 35. They securely hold the fence anywhere you set it on the band saw table.

JIG PARTS. Besides the magnets, the jig consists of just two parts. A base and a handle, see drawing below. Since everything is attached to the base, I started with it first.

BASE. The base consists of a guide board flanked by a pair of "wings" on the sides. (This provides a platform wide enough for the magnets.) Before gluing on the wings, a shallow bevel is cut on both sides of the guide board at both ends. This forms a pivot point for guiding your workpiece. Also, by cutting a notch on one end of the guide board, you can create a short fence for short stock, see detail 'b'. The support wings glued to the bottom are also angled on both ends to match the bevels on the guide board.

HANDLE. With the magnets attached, the jig can be completed by making a handle. This handle is a "quick-release" lever that makes it easy to break the magnetic bond to move the jig, see inset photo above.

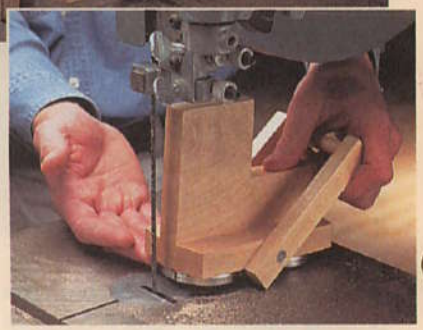

Start by joining the side pieces with a ½"-diameter dowel. Then screw the sides to the base. The important thing is where you drill the screw holes in the handle. It determines how much leverage you'll have to lift up the base. Mine were about 1" from the end.

JIG USE. This jig sits behind the blade and guides the stock. Just pivot the workpiece against the fence to follow your layout line, see detail 'a'.

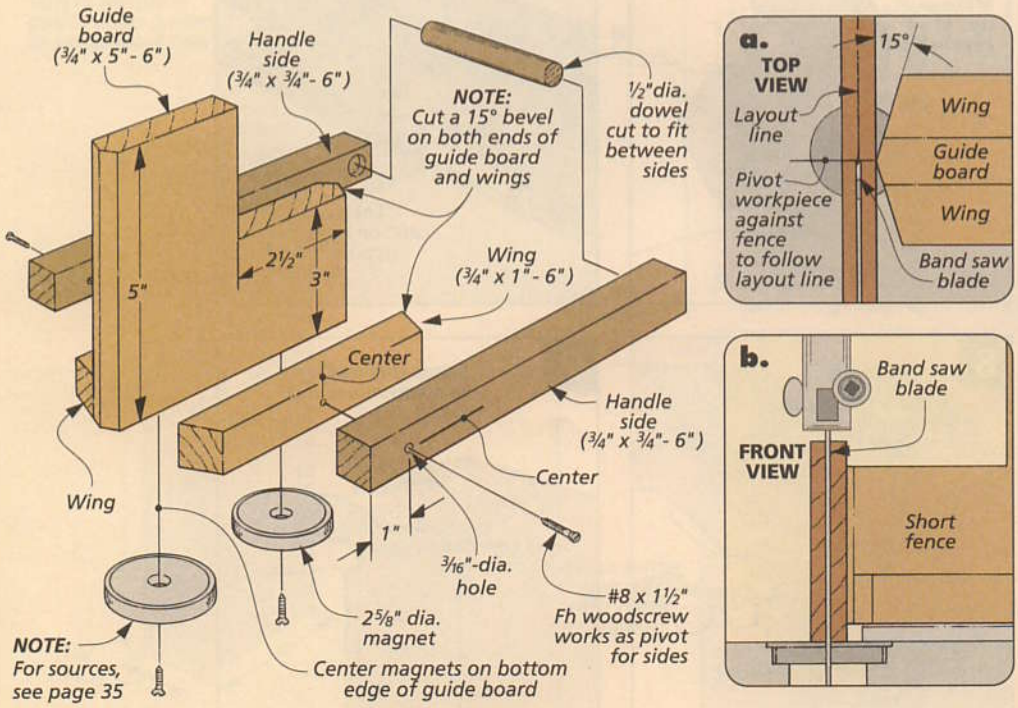

FEATURE YOUR JIG

If you've built an *original* jig and would like to see it featured on this page, send your idea to *Woodsmith*, Reader's Jig, 2200 Grand Ave., Des Moines, IA 50312.

If we publish it, we will send you $100 and a full set of *Woodsmith* back issues, with binders. Include a sketch (or photo), explain how it's used, and include a daytime phone number.

SOURCES

Woodsmith Project Supplies offers hardware kits and supplies for some of the projects shown in this issue. Supplies for these projects are also available at your local hardware store or through the mail order sources at right.

MODULAR CABINETS

The modular wall cabinets, shown on page 6, are held together with knock-down hardware and are designed so you can build as many or as few units as you like.

Because of this, *Woodsmith Project Supplies* is offering the different pieces of hardware separately in small quantities. This way, you can order just what you need. (The wood knobs are available at local hardware stores or any of the sources listed at right.)

Note: To mount the European-style overlay hinges, you'll need a 35mm Forstner drill bit. (I used a 1⅜"-dia. bit.) For the Blum fittings, you'll need a 25mm bit and a 3/16" bit. See sources at right.

1009-100 Blum Knock-Down Fittings (8).....$4.95

1007-400 125° Overlay Hinges (one pair).....$6.95

1004-200 Connector Bolts (6).....$1.95

1001-310 Spoon-style Shelf Supports (12).....$.95

Note: This or similar hardware is available from woodworking stores and the sources listed at right.

EDGING. To edge the plywood on the cabinets, we made our own edging from leftover plywood, see page 17. But if you don't end up with extra plywood or don't want to make your own edging, there are several other options you can buy.

Edging comes three different ways. All three are made from thin strips of solid wood, but each is applied differently. (Veneer edging is available at woodworking stores and the sources listed at right.)

TRADITIONAL. This type of edging is a plain, solid wood strip that's usually applied with contact adhesive.

ADHESIVE-BACKED. Another kind of edging comes with a layer of adhesive already on the back. To activate the adhesive, you simply iron it on with a household iron.

VENEER TAPE. The last type of edging is veneer tape. Just peel off the backing and press it into place.

CD STORAGE CASE

The CD case on page 18 requires some ½"-dia. dowels and a 12"-dia. lazy susan. Both of these items are commonly available at local hardware stores and the sources listed at right.

ROUTER BIT STORAGE

To keep the router bits in our shop organized, we built the storage cabinet shown on page 28. The hardware needed to build the project is currently available from *Woodsmith Project Supplies*. The kit includes the following:

(2) 5/16" Round Magnetic Catches w/Strikes
(2) 1 1/16" x 1¼" Butt Hinges with Woodscrews
(1) ¾" Birch Knob
(20) ¼" i.d. Nylon Sleeves

7105-100 Router Bit Storage Cabinet Hardware.....$5.95

Note: This or similar hardware is available from hardware stores as well as the sources listed at right.

MAGNETIC FENCE

The band saw fence on page 34 is anchored by two magnets. These magnets are currently available through *Woodsmith Project Supplies*.

1001-249 Pot Ceramic Magnet (35 lb.).....$6.95 ea.

WOODSMITH PROJECT SUPPLIES

To order a hardware kit from *Woodsmith Project Supplies* or for a copy of our *WoodsmithShop* catalog, use our Toll Free order line. It's open Monday through Friday, from 7 AM to 7 PM Central Time.

Before calling, please have your VISA, MasterCard, or Discover Card ready.

If you would like to mail your order in, call the number below for more information concerning shipping charges as well as any applicable sales tax.

1-800-444-7527

Note: Prices subject to change after August 1996

WoodNet™ COMPUTER BULLETIN BOARD FOR WOODWORKERS

- More than 50 Project Plans to Download
- Step-by-Step "How-to" Articles
- Woodworking & Finishing Forums
- Back Issue Indexes for *Woodsmith* & *ShopNotes*
- For PC or Mac
- Download FREE Plans on First Call
- Join Hundreds of Members

To log on to WoodNet, set your communication program to 8 data bits, 1 stop bit, no parity, full duplex, and ANSI terminal emulation. Then call 1-515-245-9663. Questions? Call us at: 515-282-7000 x2173, M-F 9-5.

MAIL ORDER SOURCES

Similar project supplies and hardware may be ordered from the following companies:

Woodcraft
800-225-1153
125° hinges, Connector bolts, Shelf supports, Metric bits, Veneer edging, CD hardware

Woodsmith Store
800-835-5084
125° hinges, Connector bolts, Knock-down fittings, Shelf supports, Metric bits, Veneer edging, CD hardware, Router cabinet hardware

Woodworker's Hardware
800-383-0130
125° hinges, Connector bolts, Knock-down fittings, Shelf supports, Metric bits, Veneer edging, Lazy susan, Router cabinet hardware

Woodworkers' Store
800-279-4441
125° hinges, Connector bolts, Knock-down fittings, Shelf supports, Metric bits, Veneer edging, CD hardware, Router cabinet hardware

Woodworker's Supply
800-645-9292
125° hinges, Connector bolts, Shelf supports, Metric bits, Veneer edging, CD hardware

FINAL DETAILS

▲ *This large project is a simple combination of standard-size cabin*
Besides being able to customize the number and arrangement of
cabinets, you can also add glass or wood doors. See page 6 for pl

▲ *These modular cabinets are easy to build — we used knock-down hardware to hold each unit together. See the article beginning on page 14.*

▲ *The lid on this photo box does double duty. Not only does it open and close on sliding dovetails, it's also an attractive frame for displaying photos. Plans begin on page 24.*

#BXNC8DD**CAR-RT-SORT**R001
#WSM0003278280/S#05 OCT 97
J DIEDERICHS ZK
4264 HAPPY VALLEY RD
SEQUIM WA 98382-9742